Sex chromosomes control vertical transmission of feminizing *Wolbachia* symbionts in an isopod

Thomas Becking[1], Mohamed Amine Chebbi[1], Isabelle Giraud[1], Bouziane Moumen[1], Tiffany Laverré[1], Yves Caubet[1], Jean Peccoud[1], Clément Gilbert[1,2,3] and Richard Cordaux[1,3,*]

[1]Laboratoire Ecologie et Biologie des Interactions, Equipe Ecologie Evolution Symbiose, Unité Mixte de Recherche 7267 Centre National de la Recherche Scientifique, Université de Poitiers, Poitiers, France.

[2]Present address: Laboratoire Evolution, Génomes, Comportement, Écologie, Unité Mixte de Recherche 9191 Centre National de la Recherche Scientifique and Unité Mixte de Recherche 247 Institut de Recherche pour le Développement, Université Paris-Sud, Gif-sur-Yvette, France.

[3]CG and RC are equal senior authors.

* Corresponding author: Dr. Richard Cordaux

Phone: +33-5-49-45-36-51

Email: richard.cordaux@univ-poitiers.fr

Abstract

Microbial endosymbiosis is widespread in animals, with major ecological and evolutionary implications. Successful symbiosis relies on efficient vertical transmission through host generations. However, when symbionts negatively affect host fitness, hosts are expected to evolve suppression of symbiont effects or transmission. Here we show that sex chromosomes control vertical transmission of feminizing *Wolbachia* endosymbionts in the isopod *Armadillidium nasatum*. Theory predicts that the invasion of an XY/XX species by cytoplasmic sex ratio distorters is unlikely because it leads to fixation of the unusual (and often lethal or infertile) YY genotype. We demonstrate that *A. nasatum* X and Y sex chromosomes are genetically highly similar and YY individuals are viable and fertile, thereby enabling *Wolbachia* spread in this XY-XX species. Nevertheless, we show that *Wolbachia* cannot drive fixation of YY individuals because infected YY females do not transmit *Wolbachia* to their offspring, unlike XX and XY females. The genetic basis fits the model of a Y-linked recessive allele (associated with an X-linked dominant allele), in which the homozygous state suppresses *Wolbachia* transmission. Moreover, production of all-male progenies by infected YY females restores a balanced sex ratio at the host population level. This suggests that blocking of *Wolbachia* transmission by YY females may have evolved to suppress feminization, thereby offering a whole new perspective on the evolutionary interplay between microbial symbionts and host sex chromosomes.

Keywords

Male heterogamety, sex chromosomes, endosymbiont, sex ratio distorter, *Wolbachia*, genetic conflicts, feminization, genome sequencing

Introduction

Microbial endosymbiosis is widespread in animals, with major effects on host ecology and evolution [1,2]. Successful symbiosis relies on efficient symbiont transmission through host generations. Vertical transmission occurs when symbionts are transferred from parent to offspring, usually through the maternal germ line [3,4]. From a symbiont perspective, faithful maternal inheritance can be achieved by conferring benefits to hosts, such as nutritional provisioning [5], defense against natural enemies [6] and pathogen resistance [7,8]. This transmission strategy leads to convergence of symbiont and host fitness. Conversely, symbionts may follow a selfish strategy consisting of favouring their transmission at the expense of host fitness. This is achieved through manipulation of host reproduction, which can result in highly distorted sex ratios [9,10]. As balanced sex ratios are optimal for most nuclear genes owing to biparental inheritance, hosts are predicted to evolve suppression mechanisms to control symbiont effects or transmission [10,11]. Genetic conflicts between sex ratio distorters, such as feminizing symbionts, and the rest of the genome are increasingly recognized as drivers of the evolution of host sex determination systems [10–16]. Here we take the reverse perspective and investigate whether host sex chromosome systems can influence symbiont transmission and dynamics.

In many animals, sex is determined by a locus located on sex chromosomes that is heterozygous in one sex (the heterogametic sex) and homozygous in the other sex (the homogametic sex). Two major types of sex chromosomes exist: male heterogamety (XY males and XX females) and female heterogamety (ZZ males and ZW females) [13,15]. Sex chromosomes evolve from autosomes that acquired a sex-determining locus characterized by sex-specific inheritance. Subsequently, genomic regions around sex-determining loci often stop recombining, leading to gradual accumulation of nucleotide and structural variation and repetitive DNA [13,15,17–19]. This so-called degeneration process also causes the formation of pseudogenes and gene loss, resulting in increasing differentiation of sex chromosomes over time. This is well illustrated by the human X and Y sex chromosomes, which dramatically differ in size and gene content [19].

Arthropods host a diverse array of intracellular symbionts, including bacteria (such as *Wolbachia*, *Cardinium*, *Rickettsia*, *Spiroplasma* and others) and unicellular eukaryotes (microsporidia), that are able to distort host sex ratios towards females [9,10]. The evolutionary impact of cytoplasmic sex ratio distorters on host sex determination systems has been particularly investigated in terrestrial isopods (crustaceans). This is because both female and male heterogametic systems of sex chromosomes are found in this speciose taxonomic group [20] and many species are

naturally infected with *Wolbachia* bacteria [21,22]. *Wolbachia* are intracellular, maternally inherited endosymbionts of arthropods, often acting as reproductive parasites that manipulate host reproduction to favour infected females in host populations [23]. In terrestrial isopods, *Wolbachia* is best known as a sex ratio distorter due to its ability to feminize genetic males into phenotypic females [10,24–26].For example, the presence of feminizing *Wolbachia* in *Armadillidium vulgare* leads to highly female-biased progenies [27,28] because symbionts override the ZZ/ZW system of sex chromosomes [29,30]. As a result, genetic ZZ male embryos develop as phenotypic ZZ females when infected by *Wolbachia*. Theoretical models predict the extinction of the W sex chromosome in *A. vulgare* lines infected by *Wolbachia* [31,32] and empirical evidence verified this prediction [33,34]. Thus, all individuals of *Wolbachia*-infected lineages end up with ZZ sex chromosomes at equilibrium, those inheriting *Wolbachia* develop as females and those lacking *Wolbachia* develop as males. This phenomenon is known as cytoplasmic sex determination [10,24–26]. In sum, invasion of a ZZ/ZW species by feminizing *Wolbachia* is not problematic because it leads to the fixation of the ZZ genotype, which is the natural male genotype.

In sharp contrast with ZZ/ZW heterogamety, the conditions allowing feminizing *Wolbachia* to spread in an XY/XX heterogametic system are much more stringent. Indeed, theoretical work predicts that infection of an XY/XX system by a cytoplasmic sex ratio distorter should drive the loss of the X chromosome and concomitantly lead to fixation of the YY genotype at equilibrium [31]. In this case, YY individuals inheriting *Wolbachia* should develop as females and those lacking *Wolbachia* should develop as males. However, YY is not a standard genotype and it may often be lethal or infertile, owing to Y chromosome degeneration causing the loss of essential genes [13,15,17–19]. Therefore, XY/XX heterogamety is expected to be incompatible with invasion of feminizing *Wolbachia* symbionts, unless the X and Y chromosomes are not substantially divergent, i.e. they both carry all vital loci and are genetically very similar. To the best of our knowledge, this prediction has never been explored empirically.

Here, we investigated the interplay between sex chromosomes and *Wolbachia* symbionts in *Armadillidium nasatum*, a terrestrial isopod species related to *A. vulgare* [20]. Analogous to *A. vulgare*, a feminizing *Wolbachia* strain (*w*Nas) is naturally present in *A. nasatum* [21,35,36]. However, unlike *A. vulgare*, chromosomal sex determination follows XY/XX heterogamety in *A. nasatum* [20,35]. This result was established using an original strategy consisting of experimentally reversing young genetic females into phenotypic males, crossing them with their sisters and analyzing sex ratios of the resulting progenies [20,35]. Here, based on whole-genome sequencing, pedigree analyses and simulations, we show that *Wolbachia* endosymbionts can spread in *A. nasatum* populations because *A. nasatum* sex chromosomes are genetically highly similar and YY males and

109 females are both viable and fertile. Nevertheless, *Wolbachia* cannot drive the loss of the X
110 chromosome because infected YY females do not transmit *Wolbachia* to their offspring, unlike XX
111 and XY females. As infected YY females produce all-male progenies, a balanced sex ratio is
112 maintained at the host population level despite the presence of feminizing *Wolbachia*, suggesting
113 that blocking of *Wolbachia* transmission by YY females may have evolved to suppress feminization.

114

115 **Results**

116

117 De novo *assembly and annotation of male (XY)* A. nasatum *genome*

118 We sequenced the male (XY) genome of an *A. nasatum* line derived from wild animals
119 sampled in Thuré (France) in 2008. Males and females from this line have been consistently
120 producing progenies with balanced sex ratios in our laboratory. In addition, sex reversal and crossing
121 experiments demonstrated that sex determination in this line follows male heterogamety [20].
122 Absence of *Wolbachia* endosymbionts in the individuals selected for sequencing was confirmed by
123 PCR.

124 We assembled the *A. nasatum* genome using a hybrid approach combining short paired-end
125 Illumina reads and long PacBio reads (S1 Table). The initial assembly was processed through
126 polishing, decontamination and scaffolding by a transcriptome assembly. The final assembly had a
127 total length of 1,223,175,971 bp. It was composed of 25,196 contigs and scaffolds (hereafter
128 collectively referred to as "contigs") with an N_{50} of 86,284 bp, and containing barely no (0.01%)
129 undetermined nucleotides (Table 1). Genome completeness assessment using Benchmarking
130 Universal Single Copy Orthologs (BUSCO 3.0.1) [37] revealed that 1,001 of 1,066 (94%) conserved
131 specific arthropod genes were present in the assembly (Table 1). Furthermore, transcriptome
132 assembly alignment on the genome assembly yielded 99.0% of transcripts longer than 1 kb aligned.
133 Thus, we have obtained a reliable assembly of the XY male genome from *A. nasatum*.

134 **Table 1.**Summary information of *Armadillidium nasatum* genome assembly.

Genome assembly features	Assembly figures
Assembly statistics	
Number of contigs and scaffolds	25,196
Total size	1,223,175,971bp
Longest contig/scaffold	877,941bp
Number of contigs and scaffolds >1 kb	25,166
N_{50} contig size	75,116bp
N_{50} scaffold size	86,284bp
Undetermined nucleotides	0.01%
G+C content	25.77%
Analysis of BUSCO genes	
Complete genes	974/1066 (91.4%)
Complete and single-copy genes	932/1066 (87.4%)
Complete and duplicated genes	42/1066 (3.9%)
Fragmented genes	27/1066 (2.5%)
Missing genes	65/1066 (6.1%)

135

136

137 The annotation of the *A. nasatum* assembly included 14,636 predicted gene models with an
138 average length of 9,422 bp and representing 11.3% of the total assembly length (S2 Table). Among
139 these predicted genes, 9,281 (63.4%) had Blastp hits to the UniProt-SwissProt database (release
140 September 2016) and 9,459 (64.6%) had InterProScan hits to Pfam domains (version 30.0) and 6,137
141 (41.9%) had Gene Ontology terms. Repeats accounted for 64.6% (or 790 Mb) of the *A. nasatum*
142 assembly (S3 Table). Specifically, transposable elements and simple tandem repeats accounted for
143 40.6% (or 496 Mb) and 23.1% (or 283 Mb) of the genome. The annotated genome sequence of *A.*
144 *nasatum* is available in DDBJ/ENA/GenBank under accession number SEYY00000000. The version
145 described in this article is version SEYY01000000.

146

147 *High genetic similarity of the X and Y chromosomes*

148 To investigate the extent of genomic differentiation between sex chromosomes, we searched
149 the *A. nasatum* assembly for contigs containing Y-specific sequences. We mapped short paired-end
150 Illumina reads generated for XY males and XX females (S1 Table) onto the *A. nasatum* assembly and
151 performed a Chromosome Quotient analysis [38]. This analysis consists of comparing the ratios of

152 female-to-male sequencing depths (CQ) for each contig, with the expectations that: (i) Y-specific
153 contigs should be mapped by male reads only (CQ ~0), (ii) X-specific contigs should be mapped by
154 female reads at twice the sequencing depth of male reads (CQ ~2), and (iii) autosomal contigs should
155 be mapped at similar sequencing depths by female and male reads (CQ ~1). The resulting frequency
156 distribution of CQ scores was unimodal and centered at CQ ~1 (mean: 1.03, median: 1.04), with no
157 peak at CQ scores of ~0 and ~2 (Fig 1a). In addition, we used the mapping-free Y chromosome
158 Genome Scan (YGS) method [39], which computes the proportion of single copy k-mers for each
159 contig of the genome assembly of the heterogametic (male) sex that are unmatched to sequencing
160 reads of the homogametic (female) sex. Y-specific contigs are expected to be unmatched by female
161 reads (YGS ~100%) while autosomal and X-linked contigs are expected to be matched entirely (YGS
162 ~0%). The resulting frequency distribution of YGS scores indicated that most contigs have very low
163 YGS scores (mean: 14.5%, median: 11.2%) and very few contigs had high YGS scores (i.e. only 43
164 contigs with YGS≥80% and just 2 with YGS≥90%) (Fig 1b). Thus, the CQ and YGS analyses consistently
165 indicated that the *A. nasatum* assembly mostly contains autosomal contigs and very few contigs
166 containing X- and Y-specific sequences. Intersecting the results of the CQ and YGS analyses identified
167 only 78 out of the 25,196 contigs of the assembly as containing putative Y-specific sequences, despite
168 the use of permissive thresholds, i.e. CQ≤0.35 and YGS≥35% (Fig 1c). The 78 contigs comprised a total
169 length of 1,327 kb, corresponding to just 0.1% of the *A. nasatum* genome assembly (S4 Table). While
170 most contigs lacked any gene (65/78, or 83%), a total of 20 genes (out of 14,636 genes in the
171 assembly) were annotated from 13 contigs (S4 Table). They constitute candidate master genes for
172 sex determination in *A. nasatum*. Thus, the Y-specific region of the *A. nasatum* genome is extremely
173 small (around one megabase) and contains very few genes, leading to the conclusion that the X and Y
174 chromosomes are poorly differentiated at the genomic and genic levels.

175

176 [Insert Fig 1 here]

177 **Fig 1.** Identification of sex-specific contigs in the *Armadillidium nasatum* genome assembly.
178 Frequency distribution of CQ (a) and YGS (b) scores calculated for each contig and scaffold of the
179 assembly. (c) Comparison of CQ and YGS scores. Each dot corresponds to one contig or scaffold
180 (those with CQ>2 are not represented). The red box contains 78 contigs with CQ≤0.35 and YGS≥35%.

181

182 To investigate sex chromosome differentiation at the molecular level, we analyzed the
183 patterns of sequence divergence and repeat content in the 78 contigs containing putative Y-specific

184 sequences relative to the other contigs of the *A. nasatum* genome. First, we analyzed the density of
185 single nucleotide polymorphisms (SNP) in the 78 contigs (after removal of hemizygous regions, to
186 focus on regions with orthologs on the X chromosome) versus the other contigs of the assembly. We
187 calculated a median SNP density of 2.61 SNP/kb between allelic X/Y regions of the 78 contigs,
188 compared to 2.55 SNP/kb across all other contigs of the assembly (S1 Fig). Thus, we observed a slight
189 but non-significant (Mann-Whitney two-sided U test, U=969,520, p=0.88) excess of SNP density in
190 allelic X/Y regions relative to other regions of the genome. In addition, the repeat content in the 78
191 contigs was slightly higher than (median 69.6%), but not significantly different (Mann-Whitney
192 bilateral U test, U=1,048,600, p=0.28) from the repeat content of all other contigs (median 67.8%)
193 (S1 Fig). Furthermore, even when focusing on 25 of the 78 contigs that were independently validated
194 as Y-linked by PCR (see below), there was no significant difference with all other contigs of the
195 assembly, both in terms of SNP density (median 3.91 SNP/kb, Mann-Whitney two-sided U test,
196 U=371,560, p=0.11) and repeat content (median 65.3%, Mann-Whitney two-sided U test, U=301,380,
197 p=0.73) (S1 Fig). Thus, the potential presence of (autosomal) false positives among the 78 contigs
198 containing putative Y-specific sequences has not affected our results. In sum, our results indicated
199 that *A. nasatum* sex chromosomes present patterns of molecular evolution that are quite similar to
200 those of other genomic regions, with a slight elevation of SNP density and repeat content in contigs
201 containing putative Y-specific sequences that is consistent with expectations for sex-specific
202 sequences of the genome [40]. We conclude that the X and Y chromosomes of *A. nasatum* are highly
203 similar not only at the genomic and genic levels, but also at the molecular level.

204

205 *YY individuals are viable and fertile*

206 To test for the existence and, if so, viability and fertility of YY individuals, we tracked Y
207 chromosome inheritance in a *Wolbachia*-infected *A. nasatum* pedigree. First, we established robust
208 Y-specific molecular markers using the putative Y-specific contigs identified previously. Reliable PCR
209 assays were successfully designed for 42 of the 78 contigs containing putative Y-specific sequences,
210 most of which (25/42) exhibited male-specific amplification with DNA samples from males and
211 females closely related to those used for genome sequencing (S4 Table). However, only 9 of the 25
212 confirmed markers displayed male-specific amplification when tested in more distantly related
213 individuals from the same population and in individuals from two other populations. Lack of sex
214 specificity of a subset of markers in some populations indicated that recombination has occurred
215 between some of the tested contigs and the sex-determining locus. This result provided further
216 evidence that the Y-specific region of the genome is extremely small in *A. nasatum*. Concomitantly,

217 the universal male specificity of 9 markers across all tested populations demonstrated that these *A.*
218 *nasatum* populations possess a homologous Y chromosome. Hence, we used a subset of these robust
219 markers to track the Y chromosome in an *A. nasatum* pedigree spanning three generations.

220 The pedigree was initiated by crossing a male with a female naturally infected by the
221 feminizing *Wolbachia* strain *w*Nas, which produced an F1 progeny comprising 17 sisters (Fig 2). Two
222 F1 sisters were then crossed with genetic males (XY), to produce two F2 progenies: I-F2-1 comprising
223 24 females and I-F2-2 comprising 32 males. *Wolbachia* infection was tested in the 62 individuals of
224 the pedigree (except the F0 father), indicating that all females carried *Wolbachia* while all males
225 lacked *Wolbachia* infection, as expected. Next, we used previously designed Y-specific markers to
226 assess the presence of the Y chromosome in the 62 individuals (except the F0 father). In the I-F2-1
227 progeny, half of the females showed amplification of the Y markers (indicating they are XY or YY) and
228 half did not (indicating they are XX). The F2-1 mother carried XX chromosomes, as she did not
229 amplify the Y markers. As all I-F2-1 offspring necessarily carry one X chromosome from their mother,
230 the 11 I-F2-1 females amplifying the Y markers must be XY. In the I-F2-2 progeny, all individuals
231 amplified the Y markers (indicating they are XY or YY), as did their mother. Given that the F2-2 father
232 is XY, if the F2-2 mother was XY, we would have expected 25% XX individuals in the I-F2-2 progeny,
233 but there was none. Thus, the I-F2-2 mother must be YY, which is the only genotype that can explain
234 that the entire I-F2-2 progeny carries at least one Y chromosome. Given the parental genotypes, we
235 predicted the I-F2-2 progeny is composed of half XY males and half YY males. Finally, the two F1
236 sisters being XX and YY, it followed that the F0 father and mother are XY. To independently assess
237 these predictions, we devised a quantitative PCR assay measuring Y chromosome dose relative to
238 autosomes (S2 Fig). This assay confirmed the predicted genotypes of the F0 and F1 individuals we
239 tested and the composition of the I-F2-2 progeny (15 XY and 17 YY individuals) (Fig 2, S5 Table). In
240 sum, the resolution of sex chromosome genotypes in the pedigree demonstrated that the YY
241 genotype is viable both as male and as female in *A. nasatum*, as is the XY genotype. Moreover, the YY
242 and XY genotypes are both fertile as females. Finally, we show below that the YY genotype is also
243 fertile as male.

244

245 [Insert Fig 2 here]

246 **Fig 2.** *Armadillidium nasatum* pedigree used to track inheritance of the Y chromosome and
247 *Wolbachia*. The pedigree spans three generations (F0-F2) and is comprised of 62 individuals (35
248 males and 27 females) for which sex chromosome genotype (XX, XY or YY) was identified and 15 F1
249 females not included in the molecular analyses (dotted circle). Males are shown as squares and

250 females as circles. Individuals carrying *Wolbachia* are shown in purple. Progeny IDs are shown in
251 grey. Sex chromosome genotype of individuals marked with an orange star (34 males and 2 females)
252 was also assessed with a quantitative PCR assay.

253

254 *Blocking of* Wolbachia *transmission by YY females prevents X chromosome loss*

255 Surprisingly, the *Wolbachia*-infected YY mother in the previous pedigree analysis produced
256 an all-male progeny (I-F2-2) entirely lacking *Wolbachia* endosymbionts (Fig 2). This is unexpected
257 because infection by feminizing *Wolbachia* endosymbionts is usually associated with highly female-
258 biased progenies, due to the maternal transmission of *Wolbachia* to usually >80% of the offspring
259 [10,24–26]. To test whether lack of *Wolbachia* transmission from mother to I-F2-2 progeny was a
260 random event or was due to the unusual YY maternal genotype, we extended our previous pedigree
261 analysis to span five generations (S3 Fig) and analysed a second, independent pedigree spanning four
262 generations (S4 Fig). In total, 20 families (defined as father, mother and progeny) were included in
263 the two pedigrees, representing 799 individuals (252 males and 547 females). We tested 464
264 individuals for the presence of *Wolbachia* (Table 2). As expected, most tested females were infected
265 by *Wolbachia* (180/214) while no tested male was (0/250). Based on the patterns of Y chromosome
266 amplification and following a reasoning similar to that described in the previous section, we were
267 able to infer sex chromosome genotypes for most analysed individuals. In addition, we
268 independently verified sex chromosome genotypes of the parents of the 20 families using the
269 aforementioned quantitative PCR assay (S5 Table). The sex chromosome genotypes of the 20
270 mothers included 11 XX, 5 XY and 4 YY females (S3 and S4 Fig, Table 2). All tested fathers were XY
271 males, except the father of the II-F2-1 progeny which was a YY male. Interestingly, this individual
272 demonstrated that the YY genotype is viable and fertile as male.

Table 2. Composition and frequency of *Wolbachia* infection in 20 families of *Armadillidium nasatum*. *Wolbachia* frequency in progenies was calculated as the *Wolbachia* frequency observed among tested females weighted by female proportion in the progenies (as all males lack *Wolbachia*).

Progeny ID	Parental genotypes		Progeny size	Female number	Female proportion	*Wolbachia* presence in males		*Wolbachia* presence in females		*Wolbachia* frequency
	Mother	Father				Nb. tested	Nb. infected	Nb. tested	Nb. infected	
I-F1-1	XY	XY	17	17	100%	0	0	3	3	100%
I-F2-1	XX	XY	24	24	100%	0	0	24	24	100%
I-F2-2	YY	XY	32	0	0%	32	0	0	0	0%
I-F2-3	XX	XY	52	52	100%	0	0	2	2	100%
I-F3-1	XY	XY	68	68	100%	0	0	12	12	100%
I-F3-2	XX	XY	33	33	100%	0	0	10	8	80%
I-F3-3	XX	XY	59	59	100%	0	0	12	12	100%
I-F3-4	XX	XY	40	40	100%	0	0	10	9	90%
I-F4-1	XX	XY	50	39	78%	11	0	15	12	62%
I-F4-2	XX	XY	41	24	59%	17	0	13	0	0%
I-F4-3	XX	XY	32	10	31%	22	0	10	2	6%
I-F4-4	XX	XY	16	16	100%	0	0	10	9	90%
I-F4-5	XX	XY	51	51	100%	0	0	15	15	100%
I-F4-6	XY	XY	42	19	45%	23	0	13	7	24%
II-F1-1	XX	Y?	13	13	100%	0	0	2	2	100%
II-F2-1	XY	YY	60	60	100%	0	0	60	60	100%
II-F2-2	XY	XY	20	20	100%	0	0	1	1	100%
II-F3-1	YY	XY	28	0	0%	28	0	0	0	0%
II-F3-2	YY	XY	42	0	0%	42	0	0	0	0%
II-F3-3	YY	XY	57	0	0%	57	0	0	0	0%

Wolbachia transmission rate from mother to offspring differed significantly between XX, XY and YY mothers, considering all 20 families (Kruskal-Wallis test, χ^2=8.84, p=0.01) or only the 16 families in which *Wolbachia* presence was tested in ≥10 individuals (Kruskal-Wallis test, χ^2=7.91, p=0.02). *Wolbachia* transmission rate was high (generally ≥80%) and did not differ significantly between XX and XY mothers (Dunn's post-hoc tests, p=0.73 for 20 families and p=0.56 for 16 families) (Fig 3). By contrast, *Wolbachia* infected none of the 159 offspring of the 4 YY mothers. This result cannot be ascribed to *Wolbachia* transmission to offspring and subsequent selective death of embryos carrying *Wolbachia* infection because progeny size did not differ significantly between XX, XY and YY mothers (Kruskal-Wallis tests, χ^2=0.18, p=0.91 for 20 families and χ^2=3.32, p=0.19 for 16 families) (Table 2). Instead, the YY genotype is associated with a lack of *Wolbachia* transmission from mother to offspring. As a result, *Wolbachia* transmission rate differed significantly between YY mothers and both XX mothers (Dunn's post-hoc tests: p=0.006 for 20 families and p=0.01 for 16 families) and XY mothers (Dunn's post-hoc tests: p=0.008 for 20 families and p=0.01 for 16 families) (Fig 3). Consequently, as all offspring inherited a Y chromosome from their YY mother but no *Wolbachia* endosymbiont, they all developed as males (Table 2). Importantly, YY mothers originated from the two independent pedigrees we analysed (S3 and S4 Fig), indicating that the observed pattern is robust to *A. nasatum* genetic background.

[Insert Fig 3 here]

Fig 3. Boxplot of *Wolbachia* transmission rate from mother to offspring (measured as the frequency of *Wolbachia*-carrying individuals in each progeny) according to mother's sex chromosome genotype. The analysis is based on 16 progenies (n) for which *Wolbachia* presence was tested in ≥10 individuals. Thick lines and boxes depict median and interquartile range, respectively. Whiskers are bounded to the most extreme data point within 1.5 the interquartile range. Plots marked with the same letter (a, b) are not statistically different from each other (Kruskal-Wallis test, followed by pairwise comparison Dunn test).

As YY females exclusively produce males, only XX and XY females can produce female offspring in *Wolbachia*-infected lines of *A. nasatum*. Thus, the X chromosome is necessarily transmitted to at least a subset of each progeny of these *Wolbachia*-infected females. To evaluate consequences on sex chromosome frequencies in the long term, we extended Taylor's theoretical work [31] to enable the transmission rate of a cytoplasmic sex ratio distorter to vary depending on

309 female sex chromosome genotype. Specifically, we simulated the equilibrium frequencies of X and Y
310 chromosomes in a population of a diploid genetic model containing a distorter with transmission
311 rates of α, α and 0 in XX, XY and YY females (with α varying from 0 to 1), respectively, to reflect our
312 empirical results. Under these conditions, equilibrium frequencies are 25% and 75% for the X and Y
313 chromosomes for α<0.55 (Fig 4a). In such cases, the distorter is lost from the population at
314 equilibrium and the population is comprised of XY males and XX females in equal proportions. By
315 contrast, for higher α values, equilibrium frequencies of the X and Y chromosomes vary in opposite
316 directions, to the extent that the Y chromosome becomes more frequent than the X chromosome,
317 but X equilibrium frequency is always ≥12.5%, whatever α (Fig 4a). Thus, a consequence of the lack of
318 transmission of the distorter by YY females is that the X chromosome cannot be lost from the
319 population. Another consequence evidenced by our simulations is that the equilibrium frequency of
320 the distorter never exceeds 50%, whatever α (Fig 4a). Remarkably, a balanced sex ratio is maintained
321 in the population at equilibrium, despite infected females individually producing progenies highly
322 biased towards either females (XX and XY mothers) or males (YY mothers) (Fig 4b). This is in sharp
323 contrast with the highly female-biased sex ratios at equilibrium expected for α>0.5 when the
324 distorter is transmitted by all three types of females [31] (Fig 4b).

325

326 [Insert Fig 4 here]

327 **Fig 4.** Evolutionary consequences of a cytoplasmic sex ratio distorter at the population level. (a)
328 Equilibrium frequencies of X chromosome (pink line), Y chromosome (blue line) and distorter (dashed
329 line), according to distorter transmission rate in XX and XY females (YY females do not transmit the
330 distorter). (b) Evolution of the frequencies of females (solid lines) and individuals carrying the
331 distorter (dashed lines) through time, with a distorter transmission rate of 0.9. Green: YY females do
332 not transmit the distorter (only XX and XY females do); orange: all females transmit the distorter.

333

334 **Discussion**

335

336 We sequenced the genome of the terrestrial isopod *A. nasatum*. With an N_{50} of 86 kb, high
337 completeness (BUSCO=94%) and near absence of unidentified nucleotides (0.01%), our ~1.2 Gb
338 assembly is among the best assembled of all large-genome crustaceans sequenced to date [30]. Our
339 results establish that *A. nasatum* X and Y chromosomes are genetically highly similar. The Y-specific

region of the genome may be as small as one megabase and it contains very few genes. Even at nucleotide resolution, sequence divergence and repeat content indicate very limited sex chromosome differentiation. This result explains why the unusual YY genotype is viable in this species. The underlying causes of the very high similarity of *A. nasatum* sex chromosomes include young evolutionary age, ongoing recombination or both. In any event, this high similarity was likely instrumental to the establishment of feminizing *Wolbachia* infection in the male heterogametic isopod *A. nasatum*.

An important outcome of the infection of *A. nasatum* by feminizing *Wolbachia* is the unusual production of YY individuals and XY females. This situation challenges the classical model of sex chromosome evolution by affecting chromosome effective population size (N_e) and recombination patterns. Classically, recombination arrest occurs between the X and Y chromosomes, leading to a drastic reduction of Y chromosome N_e to one third of X chromosome N_e and one fourth of autosome N_e (because there is one Y chromosome dose for three X chromosome doses and four autosome doses per mating pair). Lowered N_e results in enhanced genetic drift and concomitant reduction of selection efficiency, leading the Y chromosome to accumulate deleterious mutations and degenerate [13,15,17–19]. However, the existence of YY individuals and XY females implies that the standard expectation of sex chromosome N_e does not apply to *A. nasatum* in the presence of *Wolbachia*. Indeed, our simulations indicate that X chromosome N_e should stabilize at about one fourth of Y chromosome N_e and about one fifth of autosome N_e at observed *Wolbachia* transmission rates (Fig 4a). Thus, X chromosome N_e, not Y chromosome N_e, is predicted to be dramatically reduced in *A. nasatum* genetic backgrounds infected by feminizing *Wolbachia*. Furthermore, the occurrence of YY individuals opens the possibility of Y-Y recombination and more efficient selection, which may prevent the accumulation of deleterious mutations on the Y chromosome. By contrast, XX individuals are rare according to our simulations (<2%), thereby reducing the opportunity of X-X recombination. This suggests that the X chromosome, rather than the Y chromosome, may accumulate deleterious mutations and degenerate in the long term. Another possibility to consider is that recombination patterns may differ between sexes (heterochiasmy) in some species, so that the X and Y chromosomes may not recombine simply because males do not recombine (whereas females do) [15]. If so, the existence of XY females in *A. nasatum* as a consequence of *Wolbachia* infection would open the possibility of X-Y recombination in phenotypic females, as previously reported in frogs [41]. Unfortunately, male and female patterns of recombination are unknown in terrestrial isopods. Their investigation therefore represents a perspective for future research. In any event, there appears to be ample scope for microbial symbionts to drive the molecular evolution of their host sex chromosomes.

374 Remarkably, infected YY females did not transmit *Wolbachia* to any offspring, as confirmed in
375 two independent pedigrees. An evolutionary consequence is that the YY genotype cannot become
376 fixed (nor the X chromosome lost) in infected *A. nasatum* lines. Lack of *Wolbachia* transmission by YY
377 females also raises the question of the underlying mechanism controlling vertical transmission of the
378 symbionts. In sharp contrast with the YY genotype, the alternative XX and XY genotypes were
379 associated with similarly high rates of *Wolbachia* transmission in both pedigrees. Thus, the genetic
380 basis of *Wolbachia* transmission control fits the model of a recessive allele linked to the Y
381 chromosome (associated with an X-linked dominant allele), in which the homozygous state blocks
382 *Wolbachia* transmission. It has been shown previously that within-host microbial interactions can
383 enhance or reduce symbiont vertical transmission [42]. This applies to *Wolbachia*, which vertical
384 transmission is prevented by *Asaia* bacteria in *Anopheles* mosquitoes [43]. Host nuclear genotype is
385 also an important factor that can affect symbiont vertical inheritance. For example, *Wolbachia*
386 maternal transmission is strongly reduced by actin in *Drosophila* [44] and the *wds* gene in *Nasonia*
387 [45]. Our results show that sex chromosome genotype represents yet another case of host nuclear
388 control over symbiont transmission. *Wolbachia* symbionts were previously found to prevent sex
389 chromosome transmission in *Eurema mandarina* butterflies [46]. Here we show that sex
390 chromosomes can prevent *Wolbachia* transmission in *A. nasatum*, thereby offering a whole new
391 perspective on the molecular interplay between feminizing symbionts and host sex chromosomes.

392 The mutation causing the suppression of *Wolbachia* transmission in *A. nasatum* may have
393 existed in the standing pool of sex chromosome variants prior to *Wolbachia* infection, having evolved
394 either neutrally or under natural selection. Alternatively, the mutation may have evolved as an
395 adaptation subsequent to *Wolbachia* infection. An excellent empirical example supporting the latter
396 hypothesis is offered by the butterfly *Hypolimnas bolina*, in which suppression of *Wolbachia*-
397 mediated male killing was found to have evolved in Southeast Asia secondarily to *Wolbachia* spread
398 in the Indo-Pacific region [47]. While infection by feminizing symbionts normally leads to highly
399 female-biased sex ratios, the ability of infected YY females to impede *Wolbachia* transmission in *A.*
400 *nasatum* results in the production of all-male progenies, due to the systematic inheritance of a
401 maternal Y chromosome. Interestingly, this situation restores balanced sex ratios at the population
402 level, as indicated by our simulations (Fig 4) and consistent with empirical evidence [35,48]. This
403 opens the possibility that blocking of *Wolbachia* transmission by YY females may have evolved to
404 suppress feminization and ensuing sex ratio biases, as predicted by sex ratio selection [10–12,15].
405 Indeed, strong sex ratio biases towards females imposed by feminizing symbionts induce nucleo-
406 cytoplasmic conflicts with most nuclear genes, which are biparentally inherited and optimally benefit
407 from balanced sex ratios. In principle, conflict resolution may be achieved by restoring balanced sex

408 ratios at the parental level, through selection of females producing balanced sex ratios [49].
409 Alternatively, resolution may occur at the population level, through selection of females producing
410 male-biased sex ratios to compensate for the female-biased progenies of infected females [49]. YY
411 females in *A. nasatum* may represent an original example of conflict resolution at the population
412 level. Several cases of nuclear suppression preventing the action or transmission of sex ratio
413 distorting symbionts have been reported [11], including in the isopod *A. vulgare* [50,51]. A
414 distinguishing feature of symbiont suppression in *A. nasatum* is its connection with sex
415 chromosomes.

416 **Materials & Methods**

417

418 *Genome sequencing and assembly*

419 All *A. nasatum* individuals used for sequencing were from our inbred laboratory line ANa,
420 which is originally derived from wild animals caught in Thuré, France, in 2008. Specifically, we used
421 XY genetic males and XX genetic females descended from a single pair of grandparents of the family
422 ANa2 (according to the crossing scheme shown in S5 Fig) to minimize heterozygosity. Total genomic
423 DNA was extracted using the QiagenDNeasy Blood and Tissue Kit, according to the protocol for
424 animal tissues (3 h of incubation in proteinase K at 56°C and 30 min of RNase treatment at 37°C).
425 Absence of *Wolbachia* endosymbionts in all samples was confirmed by PCR using the *ftsZ* and *wsp*
426 markers [21,36]. Short paired-end libraries with ~200 bp insert sizes were sequenced with the
427 Illumina HiSeq2000 technology (S1 Table). In addition, PacBio RS II sequencing (P6C4 chemistry) was
428 performed to obtain long sequencing reads (S1 Table). Accession numbers for Illumina and PacBio
429 sequence datasets are provided in S1 Table.

430 Sequencing reads were subjected to quality control and filtering as described previously [30].
431 Male Illumina and PacBio sequencing reads were used in a hybrid strategy to assemble the male (XY)
432 genome of *A. nasatum*, as described previously [30]. A summary of the workflow we used (including
433 assembly, polishing, contaminant removal and scaffolding) is shown in S6 Fig. Genome assembly
434 completeness was evaluated using benchmarking for universal single copy orthologs (BUSCO, version
435 3.0.1) [37], with the arthropod profile library (-l arthropoda) composed of 1,066 arthropod core
436 genes. Repeat identification and gene annotation were performed as described previously [30].

437

438 *Identification and analyses of contigs containing putative Y-specific sequences*

439 Contigs containing putative Y-specific sequences in the *A. nasatum* assembly were identified
440 using the Chromosome Quotient (CQ) [38] and Y chromosome Genome Scan (YGS) [39], as described
441 previously [30]. The maximum CQ score was set to 0.35 to retain contigs as Y-specific candidates, as
442 recommended by CQ authors [38]. The minimum YGS score was set to 35% to retain contigs as Y-
443 specific candidates. This threshold was selected to account for the high repetitive nature of the *A.*
444 *nasatum* genome. To identify heterozygous SNPs in the contigs of the male genome assembly, we
445 applied the Genome Analysis ToolKit (GATK) pipeline (version 3.8-0-ge9d806836) [52], as described
446 previously [30].

447 PCR assays were designed on the candidate contigs as follows (S4 Table). Primers were
448 designed with Primer-BLAST [53] in unique regions of the contigs and primer specificity was checked
449 using Blastn (version 2.2.30+) [54] by aligning primers to the unmasked *A. nasatum* assembly. PCR
450 reactions were carried out in 25 µL with 5 µL of buffer 5×, 0.5 µL of dNTPs (2.15 mM), 0.7 µL of each
451 primer (10 µM), 0.25 µL of Taq polymerase 5 u/µL, and 1 µL of DNA. PCRs were conducted using the
452 following temperature cycle: 3 min at 94°C for initial denaturation, followed by 35 cycles of 30 s at
453 94°C, 30 s at 48/50/52°C (depending on primer annealing temperature) and 1 min at 72°C. The final
454 elongation step was 10 min at 72°C. PCR tests were then conducted in three successive steps: (i) test
455 on one male and three pools of two females of the ANa2 family (used for genome sequencing); (ii)
456 test on six males and twelve females from other families of our ANa laboratory line, and (iii) test on
457 two males and a pool of three females from Beauvoir-sur-Niort population (France) and on two
458 males and a pool of three females from Piriápolis population (Uruguay). After each step, loci
459 amplifying in all males and no female were retained for the next step. PCR tests targeting the
460 autosomal *18S rRNA* [30] and mitochondrial *COI* [55] genes were used as positive controls in all
461 samples. Absence of *Wolbachia* endosymbionts was also confirmed in all samples by PCR using the
462 *ftsZ* and *wsp* markers [21,36].

463

464 *Pedigree construction and analyses*

465 We generated two independent *A. nasatum* pedigrees spanning five (pedigree I, S3 Fig) and
466 four (pedigree II, S4 Fig) generations (*A. nasatum* has a generation time of one year). We started in
467 2013 with two F0 female founders isolated from a laboratory cage population (NASw) initiated in
468 2008 from wild animals (caught in Thuré, France) infected by the feminizing *Wolbachia* strain *w*Nas
469 [36]. Each F0 female produced an F1 progeny (resulting from mating with unknown F0 males from
470 the cage population). Each year, two to six females were selected from the previous generation and
471 crossed with XY genetic males from our ANa laboratory line (except the father of the II-F2-1 progeny,
472 which was selected from the NASw cage population and could carry XY or YY sex chromosomes).
473 Pedigrees I and II were composed of 14 and 6 families, respectively.

474 At each generation, total genomic DNA was extracted from the progenitors (except the F0
475 male founders and individuals which died prematurely) and from males and females of their
476 progenies. Presence or absence of *Wolbachia* was tested by PCR using the *ftsZ* and *wsp* markers
477 [21,36]. We also used two of the previously designed Y-specific markers (contig12740 and
478 contig18908) to assess the presence of the Y chromosome in the individuals, interpreting PCR results
479 as follows: amplification indicating the individual is XY or YY and lack of amplification indicating that

480 the individual is XX. PCR tests targeting the autosomal *18S rRNA* [30] and mitochondrial *COI* [55]
481 genes were used as positive controls in all samples. Based on PCR amplification patterns and
482 pedigree structures, we were able to infer sex chromosome genotypes (XX, XY or YY) for most
483 analyzed individuals.

484 To independently assess sex chromosome genotypes (XX, XY or YY), we developed a
485 quantitative PCR assay measuring Y chromosome abundance relative to autosomes. Y-specific
486 primers were designed within the Y-specific PCR amplicon previously validated in contig10349
487 (primer sequences: 5'-CCCTACACAGCATACTTGACAG and 5'-CAGGTGCTCCTTCAGAGAAAC, product
488 size: 129 bp). Contig10349 abundance was normalized against *EF2* gene abundance [56]. *EF2* is a
489 single-copy gene in the *A. nasatum* assembly located in autosomal contig8976 (YGS=8.8% and
490 CQ=1.09). PCR reactions were run in duplicates in a 480 Light-Cycler (Roche) using SYBR Green I
491 assays, under the following conditions: 10 min at 95°C and 45 cycles of [10 sec at 95°C, 10 sec at
492 60°C, 20 sec at 72°C]. A melting curve (65°C to 97°C) was recorded at the end of each reaction to
493 check PCR product uniqueness. Reaction mixture consisted of 0.5 µL of each primer (10 µM), 5µL of
494 Fast SYBR-Green Master Mix (Roche) 3 µL of bi-distilled water and 1 µL of extracted DNA.
495 Fluorescence crossing points (C_t) were calculated with the second derivative maximum method using
496 the LightCycler 1.5 software. PCR amplification efficiency was determined with a calibration curve for
497 each primer pair. Only PCR reactions producing a single product and with $C_t \leq 35$ cycles were
498 considered. Relative abundance of the Y-specific marker relative to autosomal marker was calculated
499 as $2^{-\Delta Ct}$, where $\Delta C_t = C_{t(Y\ chromosome)} - C_{t(autosome)}$. XX, XY and YY genotypes corresponded to $2^{-\Delta Ct}$ values of
500 ~0, ~0.5 and ~1, respectively.

501

502 *Simulation of sex chromosome frequencies*

503 To evaluate the evolutionary impact of cytoplasmic sex ratio distorters on sex chromosome
504 frequencies, we extended Taylor's theoretical work [31] to enable the transmission rate of the
505 distorter to vary according to female sex chromosome genotypes. Specifically, we simulated the
506 frequencies of the X chromosome, the Y chromosome, the distorter and females in a population of a
507 diploid genetic model with a distorter whose transmission rate can vary according to the sex
508 chromosome genotype of females (i.e. XX, XY and YY). We used the following equations:

509 Genotypes

510 - Males: G_1=XY ; G_3=YY ; F_M=Males frequency
511 - Females: G_2=XX ; G_4=XX.Wo+ ; G_6=XY.Wo+ ; G_8=YY.Wo+ ; F_F=Females frequency

Gametes

- Males: P_1=Y; P_3=X
- Females: P_2=X; P_4=Y; P_6=X.Wo+; P_8=Y.Wo+

Wolbachia transmission rates by females

- t_X by XX.Wo+; t_{XY} by XY.Wo+; t_Y by YY.Wo+

Gametes production formula

- Male gametes:

$$P_1 = \frac{G_1}{2F_M} + \frac{G_3}{F_M} = \frac{(G_1 + 2G_3)}{2F_M}$$

$$P_3 = \frac{G_1}{F_M}$$

- Female gametes:

$$P_2 = \frac{G_2}{F_F} + \frac{G_4(1 - t_X)}{F_F} + \frac{G_6(1 - t_{XY})}{2F_F}$$

$$P_4 = \frac{G_6(1 - t_{XY})}{2F_F} + \frac{G_8(1 - t_Y)}{F_F}$$

$$P_6 = \frac{G_4 t_X}{F_F} + \frac{G_6 t_{XY}}{2F_F}$$

$$P_8 = \frac{G_8 t_Y}{F_F} + \frac{G_6 t_{XY}}{2F_F}$$

Next generation genotypes production formula

- Males:

$$G_1' = (P_1 P_2) + (P_3 P_4)$$

$$G_3' = (P_1 P_4)$$

- Females:

$$G_2' = (P_3 P_2)$$

$$G_4' = (P_3 P_6)$$

$$G_6' = (P_1 P_6) + (P_3 P_8)$$

$$G_8' = (P_1 P_8)$$

with $\sum_{i=1}^{8} G_i' = 1$

and $G_1' = G_1$; $G_2' = G_2$ ... $G_8' = G_8$ at equilibrium.

537 **References**

538

539 1. Moran NA. Symbiosis as an adaptive process and source of phenotypic complexity. Proc Natl
540 Acad Sci USA. 2007;104: 8627. doi:10.1073/pnas.0611659104

541 2. McFall-Ngai M, Hadfield MG, Bosch TCG, Carey HV, Domazet-Lošo T, Douglas AE, et al. Animals
542 in a bacterial world, a new imperative for the life sciences. Proc Natl Acad Sci USA. 2013;110:
543 3229. doi:10.1073/pnas.1218525110

544 3. Bright M, Bulgheresi S. A complex journey: transmission of microbial symbionts. Nature
545 Reviews Microbiology. 2010;8: 218.

546 4. Funkhouser LJ, Bordenstein SR. Mom Knows Best: The Universality of Maternal Microbial
547 Transmission. PLOS Biology. 2013;11: e1001631. doi:10.1371/journal.pbio.1001631

548 5. Baumann P. Biology bacteriocyte-associated endosymbionts of plant sap-sucking insects. Annu
549 Rev Microbiol. 2005;59: 155–189. doi:10.1146/annurev.micro.59.030804.121041

550 6. Oliver KM, Degnan PH, Hunter MS, Moran NA. Bacteriophages encode factors required for
551 protection in a symbiotic mutualism. Science (New York, NY). 2009;325: 992–994.
552 doi:10.1126/science.1174463

553 7. Hedges LM, Brownlie JC, O'Neill SL, Johnson KN. Wolbachia and Virus Protection in Insects.
554 Science. 2008;322: 702–702. doi:10.1126/science.1162418

555 8. Teixeira L, Ferreira Á, Ashburner M. The Bacterial Symbiont Wolbachia Induces Resistance to
556 RNA Viral Infections in Drosophila melanogaster. PLOS Biology. 2008;6: e1000002.
557 doi:10.1371/journal.pbio.1000002

558 9. Engelstädter J, Hurst GDD. The Ecology and Evolution of Microbes that Manipulate Host
559 Reproduction. Annual Review of Ecology, Evolution, and Systematics. 2009;40: 127–149.
560 doi:10.1146/annurev.ecolsys.110308.120206

561 10. Cordaux R, Bouchon D, Grève P. The impact of endosymbionts on the evolution of host sex-
562 determination mechanisms. Trends Genet. 2011;27: 332–341. doi:10.1016/j.tig.2011.05.002

563 11. Hurst GDD, Frost CL. Reproductive parasitism: maternally inherited symbionts in a biparental
564 world. Cold Spring Harbor perspectives in biology. 2015;7: a017699.
565 doi:10.1101/cshperspect.a017699

566 12. Werren JH, Beukeboom LW. Sex Determination, Sex Ratios, and Genetic Conflict. Annual
567 Review of Ecology and Systematics. 1998;29: 233–261. doi:10.1146/annurev.ecolsys.29.1.233

568 13. Bachtrog D, Mank JE, Peichel CL, Kirkpatrick M, Otto SP, Ashman T-L, et al. Sex determination:
569 why so many ways of doing it? PLoS Biol. 2014;12: e1001899.
570 doi:10.1371/journal.pbio.1001899

571 14. Mank JE, Hosken DJ, Wedell N. Conflict on the Sex Chromosomes: Cause, Effect, and
572 Complexity. Cold Spring Harb Perspect Biol. 2014;6: a017715.
573 doi:10.1101/cshperspect.a017715

574 15. Beukeboom LW, Perrin N. The Evolution of Sex Determination. Oxford University Press; 2014.

575 16. Leclercq S, Thézé J, Chebbi MA, Giraud I, Moumen B, Ernenwein L, et al. Birth of a W sex
576 chromosome by horizontal transfer of Wolbachia bacterial symbiont genome. PNAS. 2016;
577 15036–15041. doi:10.1073/pnas.1608979113

578 17. Bergero R, Charlesworth D. The evolution of restricted recombination in sex chromosomes.
579 Trends in Ecology & Evolution. 2009;24: 94–102. doi:10.1016/j.tree.2008.09.010

580 18. Ming R, Bendahmane A, Renner SS. Sex Chromosomes in Land Plants. Annu Rev Plant Biol.
581 2011;62: 485–514. doi:10.1146/annurev-arplant-042110-103914

582 19. Bachtrog D. Y-chromosome evolution: emerging insights into processes of Y-chromosome
583 degeneration. Nat Rev Genet. 2013;14: 113–124. doi:10.1038/nrg3366

584 20. Becking T, Giraud I, Raimond M, Moumen B, Chandler C, Cordaux R, et al. Diversity and
585 evolution of sex determination systems in terrestrial isopods. Scientific Reports. 2017;7: 1084.
586 doi:10.1038/s41598-017-01195-4

587 21. Bouchon D, Rigaud T, Juchault P. Evidence for widespread Wolbachia infection in isopod
588 crustaceans: molecular identification and host feminization. Proceedings of the Royal Society of
589 London B: Biological Sciences. 1998;265: 1081–1090. doi:10.1098/rspb.1998.0402

590 22. Cordaux R, Pichon S, Hatira HBA, Doublet V, Grève P, Marcadé I, et al. Widespread Wolbachia
591 infection in terrestrial isopods and other crustaceans. Zookeys. 2012; 123–131.
592 doi:10.3897/zookeys.176.2284

593 23. Werren JH, Baldo L, Clark ME. Wolbachia: master manipulators of invertebrate biology. Nat Rev
594 Micro. 2008;6: 741–751. doi:10.1038/nrmicro1969

595 24. Rigaud T, Juchault P, Mocquard J-P. The evolution of sex determination in isopod crustaceans.
596 Bioessays. 1997;19: 409–416. doi:10.1002/bies.950190508

597 25. Bouchon D, Cordaux R, Grève P. Feminizing Wolbachia and the evolution of sex determination
598 in isopods. Insect Symbiosis, Volume 3. CRC Press; 2008. pp. 273–294. Available:
599 http://www.crcnetbase.com/doi/abs/10.1201/9781420064117.ch12

600 26. Cordaux R, Gilbert C. Evolutionary Significance of Wolbachia-to-Animal Horizontal Gene
601 Transfer: Female Sex Determination and the f Element in the Isopod Armadillidium vulgare.
602 Genes (Basel). 2017;8. doi:10.3390/genes8070186

603 27. Martin G, Juchault P, Legrand JJ. Mise en evidence d'un micro-organisme intracytoplasmique
604 symbiote de l'oniscoide Armadillidium vulgare Latr. dont la presence accompagne
605 l'intersexualite ou la feminisation totale des males genetiques de la lignee thelygene. C R Acad
606 Sci Paris. 1973;276: 2213–2216.

607 28. Cordaux R, Michel-Salzat A, Frelon-Raimond M, Rigaud T, Bouchon D. Evidence for a new
608 feminizing Wolbachia strain in the isopod Armadillidium vulgare: evolutionary implications.
609 Heredity. 2004;93: 78–84. doi:10.1038/sj.hdy.6800482

610 29. Juchault P, Legrand J-J. Croisements de néo-mâles expérimentaux chez Armadillidium vulgare
611 Latr. (Crustacé Isopode Oniscoïde). Mise en évidence d'une hétérogamétie femelle. C R Acad Sc
612 Paris. 1972;1387–1389: 274–276.

30. Chebbi MA, Becking T, Moumen B, Giraud I, Gilbert C, Peccoud J, et al. The genome of Armadillidium vulgare (Crustacea, Isopoda) provides insights into sex chromosome evolution in the context of cytoplasmic sex determination. Molecular Biology and Evolution. 2019; msz010. doi:10.1093/molbev/msz010

31. Taylor DR. Evolutionary consequences of cytoplasmic sex ratio distorters. Evol Ecol. 1990;4: 235–248. doi:10.1007/BF02214332

32. Ferdy J-B, Liu N, Sicard M. Transmission modes and the evolution of feminizing symbionts. J Evol Biol. 2016;29: 2395–2409. doi:10.1111/jeb.12963

33. Juchault P, Legrand J-J, Mocquard J-P. Contribution à l'étude qualitative et quantitative des facteurs contrôlant le sexe dans les populations du Crustacé Isopode terrestre Armadillidium vulgare Latr. I. La population de Niort (Deux-Sèvres). Arch Zool Exp Gén. 1980;121: 3–27.

34. Juchault P, Rigaud T, Mocquard JP. Evolution of sex determination and sex ratio variability in wild populations of Armadillidium vulgare (Latr.)(Crustacea, Isopoda): a case study in conflict resolution. Acta Oecologica. 1993;14: 547–562.

35. Juchault P, Legrand J-J. Analyse génétique et physiologique de la détermination du sexe dans une population du Crustacé Isopode Oniscoïde Armadillidium nasatum. Arch Zool exp gén. 1979;120: 25–43.

36. Cordaux R, Michel-Salzat A, Bouchon D. Wolbachia infection in crustaceans: novel hosts and potential routes for horizontal transmission. Journal of Evolutionary Biology. 2001;14: 237–243. doi:10.1046/j.1420-9101.2001.00279.x

37. Simão FA, Waterhouse RM, Ioannidis P, Kriventseva EV, Zdobnov EM. BUSCO: assessing genome assembly and annotation completeness with single-copy orthologs. Bioinformatics. 2015;31: 3210–3212. doi:10.1093/bioinformatics/btv351

38. Hall AB, Qi Y, Timoshevskiy V, Sharakhova MV, Sharakhov IV, Tu Z. Six novel Y chromosome genes in Anopheles mosquitoes discovered by independently sequencing males and females. BMC Genomics. 2013;14: 273. doi:10.1186/1471-2164-14-273

39. Carvalho AB, Clark AG. Efficient identification of Y chromosome sequences in the human and Drosophila genomes. Genome Res. 2013;23: 1894–1907. doi:10.1101/gr.156034.113

40. Charlesworth D, Charlesworth B, Marais G. Steps in the evolution of heteromorphic sex chromosomes. Heredity (Edinb). 2005;95: 118–128. doi:10.1038/sj.hdy.6800697

41. Rodrigues N, Studer T, Dufresnes C, Perrin N. Sex-Chromosome Recombination in Common Frogs Brings Water to the Fountain-of-Youth. Mol Biol Evol. 2018;35: 942–948. doi:10.1093/molbev/msy008

42. Rock DI, Smith AH, Joffe J, Albertus A, Wong N, O'Connor M, et al. Context-dependent vertical transmission shapes strong endosymbiont community structure in the pea aphid, Acyrthosiphon pisum. Mol Ecol. 2018;27: 2039–2056. doi:10.1111/mec.14449

43. Hughes GL, Dodson BL, Johnson RM, Murdock CC, Tsujimoto H, Suzuki Y, et al. Native microbiome impedes vertical transmission of Wolbachia in Anopheles mosquitoes. Proc Natl Acad Sci USA. 2014;111: 12498–12503. doi:10.1073/pnas.1408888111

652 44. Newton ILG, Savytskyy O, Sheehan KB. Wolbachia utilize host actin for efficient maternal
653 transmission in Drosophila melanogaster. PLoS Pathog. 2015;11: e1004798.
654 doi:10.1371/journal.ppat.1004798

655 45. Funkhouser-Jones LJ, van Opstal EJ, Sharma A, Bordenstein SR. The Maternal Effect Gene Wds
656 Controls Wolbachia Titer in Nasonia. Curr Biol. 2018;28: 1692-1702.e6.
657 doi:10.1016/j.cub.2018.04.010

658 46. Kageyama D, Ohno M, Sasaki T, Yoshido A, Konagaya T, Jouraku A, et al. Feminizing Wolbachia
659 endosymbiont disrupts maternal sex chromosome inheritance in a butterfly species. Evol Lett.
660 2017;1: 232–244. doi:10.1002/evl3.28

661 47. Hornett EA, Charlat S, Duplouy AMR, Davies N, Roderick GK, Wedell N, et al. Evolution of Male-
662 Killer Suppression in a Natural Population. PLOS Biology. 2006;4: e283.
663 doi:10.1371/journal.pbio.0040283

664 48. Juchault P, Legrand JJ. Sex determination and monogeny in terrestrial isopods Armadillidium
665 vulgare (Latreille, 1804) and Armadillidium nasatum Budde-Lund, 1885. Monografia Monitore
666 zoologico italiano. 1989;4: 359–375.

667 49. Werren JH. The coevolution of autosomal and cytoplasmic sex ratio factors. Journal of
668 Theoretical Biology. 1987;124: 317–334. doi:10.1016/S0022-5193(87)80119-4

669 50. Rigaud T, Juchault P. Genetic control of the vertical transmission of a cytoplasmic sex factor in
670 Armadillidium vulgare Latr.(Crustacea, Oniscidea). Heredity. 1992;68: 47–52.

671 51. Caubet Y, Hatcher MJ, Mocquard JP, Rigaud T. Genetic conflict and changes in heterogametic
672 mechanisms of sex determination. Journal of Evolutionary Biology. 2000;13: 766–777.
673 doi:10.1046/j.1420-9101.2000.00225.x

674 52. Van der Auwera GA, Carneiro MO, Hartl C, Poplin R, del Angel G, Levy-Moonshine A, et al. From
675 FastQ Data to High-Confidence Variant Calls: The Genome Analysis Toolkit Best Practices
676 Pipeline: The Genome Analysis Toolkit Best Practices Pipeline. In: Bateman A, Pearson WR,
677 Stein LD, Stormo GD, Yates JR, editors. Current Protocols in Bioinformatics. Hoboken, NJ, USA:
678 John Wiley & Sons, Inc.; 2013. pp. 11.10.1-11.10.33. doi:10.1002/0471250953.bi1110s43

679 53. Ye J, Coulouris G, Zaretskaya I, Cutcutache I, Rozen S, Madden TL. Primer-BLAST: A tool to
680 design target-specific primers for polymerase chain reaction. BMC Bioinformatics. 2012;13:
681 134. doi:10.1186/1471-2105-13-134

682 54. Camacho C, Coulouris G, Avagyan V, Ma N, Papadopoulos J, Bealer K, et al. BLAST+: architecture
683 and applications. BMC Bioinformatics. 2009;10: 421. doi:10.1186/1471-2105-10-421

684 55. Folmer O, Black M, Hoeh W, Lutz R, Vrijenhoek R. DNA primers for amplification of
685 mitochondrial cytochrome c oxidase subunit I from diverse metazoan invertebrates. Mol
686 Marine Biol Biotechnol. 1994;3: 294–299.

687 56. Chevalier F, Herbinière-Gaboreau J, Charif D, Mitta G, Gavory F, Wincker P, et al. Feminizing
688 Wolbachia: a transcriptomics approach with insights on the immune response genes in
689 Armadillidium vulgare. BMC Microbiology. 2012;12: S1. doi:10.1186/1471-2180-12-S1-S1

690

691 **Legends to supporting information**

692

693 **Fig. S1.** Box plots of SNP density (a) and repeat proportion (b) in the 78 computationally-inferred,
694 putative Y-linked contigs, a subset of 25 of the 78 contigs that were independently validated as Y-
695 linked by PCR, and all the other contigs of the assembly. Thick lines and boxes depict median and
696 interquartile range, respectively. Whiskers are bounded to the most extreme data point within 1.5
697 the interquartile range. Open circles represent outliers.

698 **Fig. S2.** Characterization of sex chromosome genotypes (XX, XY or YY) of *A. nasatum* individuals
699 based on a quantitative PCR assay. Y chromosome to autosome ratios were calculated for 60
700 individuals and compared to expected ratios: 1 for YY individuals (corresponding to 18 males and 3
701 females), 0.5 for XY individuals (28 males and 5 females) and 0 for XX individuals (6 females). Thick
702 lines and boxes depict median and interquartile range, respectively. Whiskers are bounded to the
703 most extreme data point within 1.5 the interquartile range.

704 **Fig. S3.** *Armadillidium nasatum* pedigree I used to track inheritance of the Y chromosome and
705 *Wolbachia*. The pedigree spans five generations (F0-F4) and is comprised of 572 individuals (119
706 males and 453 females), 269 of which were included in molecular analyses (individuals not included
707 in the molecular analyses are shown in dotted circles). Males are shown as squares and females as
708 circles. Individuals carrying *Wolbachia* are shown in purple. Progeny IDs are shown in grey. Sex
709 chromosome genotype of individuals marked with an orange star was also assessed with a
710 quantitative PCR assay.

711 **Fig. S4.** *Armadillidium nasatum* pedigree II used to track inheritance of the Y chromosome and
712 *Wolbachia*. The pedigree spans four generations (F0-F3) and is comprised of 226 individuals (132
713 males and 94 females), 196 of which were included in molecular analyses (individuals not included in
714 the molecular analyses are shown in dotted circles). Males are shown as squares and females as
715 circles. Individuals carrying *Wolbachia* are shown in purple. Progeny IDs are shown in grey. Sex
716 chromosome genotype of individuals marked with an orange star was also assessed with a
717 quantitative PCR assay.

718 **Fig. S5.** Crossing scheme used to obtain *Armadillidium nasatum* individuals whose genomic DNA was
719 extracted for Illumina (orange) and PacBio (red) sequencing. Males are shown as squares and
720 females as circles.

721 **Fig. S6.** Workflow of the hybrid strategy used for assembling the *Armadillidium nasatum* genome.

722 **Table S1**. Characteristics of *Armadillidium nasatum* sequencing datasets generated in this study.

723 **Table S2**. Annotation statistics of the *Armadillidium nasatum* genome assembly.

724 **Table S3**. Repeat content of the *Armadillidium nasatum* genome.

725 **Table S4**. Characteristics of the 78 contigs of the *Armadillidium nasatum* assembly considered as Y-
726 specific candidates.

727 **Table S5**. PCR results for Y chromosome and *Wolbachia* analyses of 72 *Armadillidium nasatum*
728 individuals. nt: not tested because male individual originating from *Wolbachia*-free line, hence
729 necessarily XY (except II-F1-1 father from *Wolbachia*-infected line, hence XY or YY). Y chromosome to
730 autosome ratio was calculated as $2^{-\Delta Ct}$.

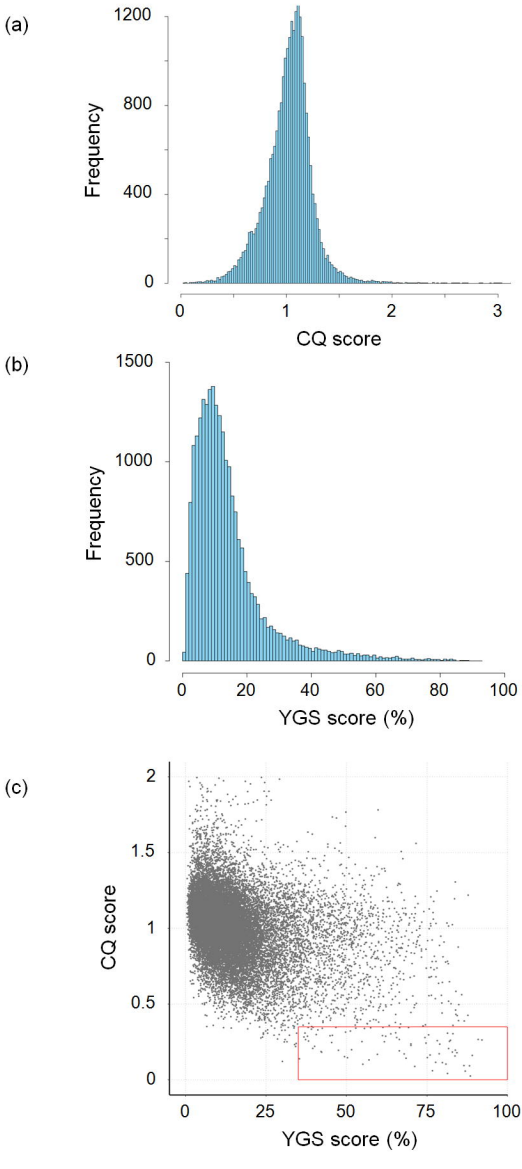
(a)
1200
800
400
0
Frequency
0
1
2
3
CQ score
(b)
1500
1000
500
0
Frequency
0
20
40
60
80
100
YGS score (%)
(c)
2
1.5
1
0.5
0
CQ score
0
25
50
75
100
YGS score (%)

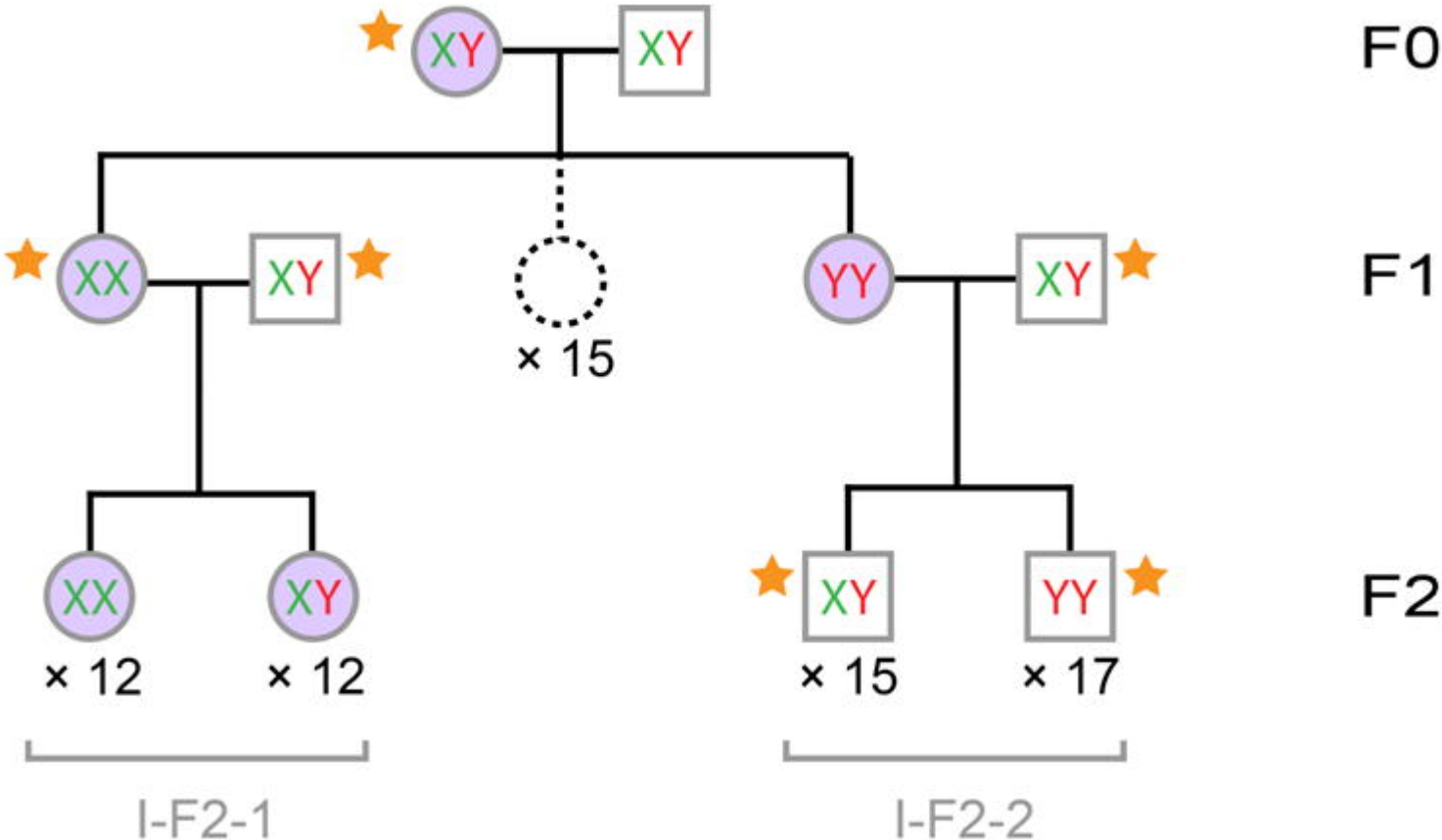
XY
XY
F0
XX
XY
× 15
YY
XY
F1
XX
XY
× 12
× 12
XY
YY
× 15
× 17
F2
I-F2-1
I-F2-2

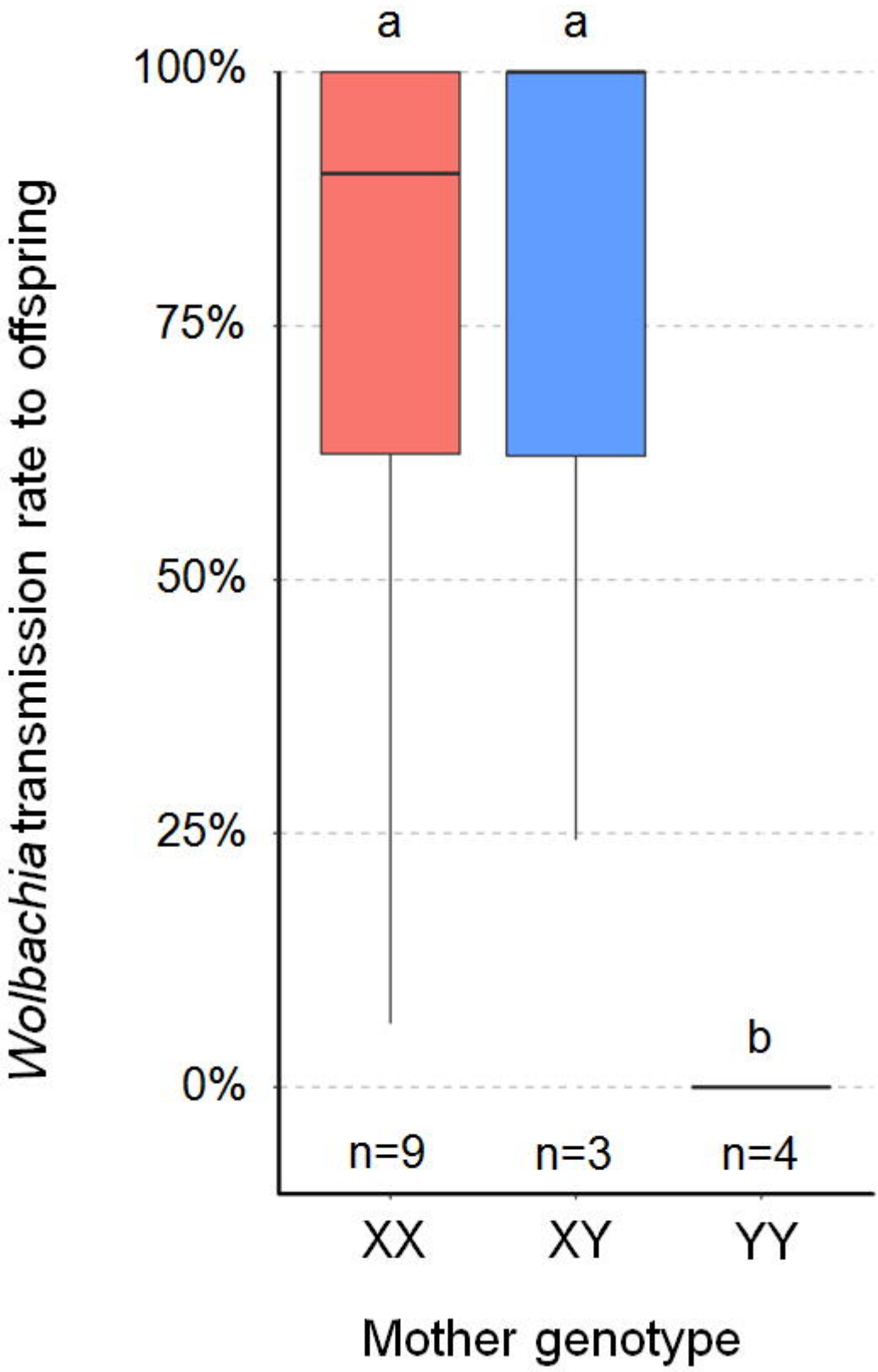
a
a
b
100%
75%
50%
25%
0%
Wolbachia transmission rate to offspring
n=9
n=3
n=4
XX
XY
YY
Mother genotype

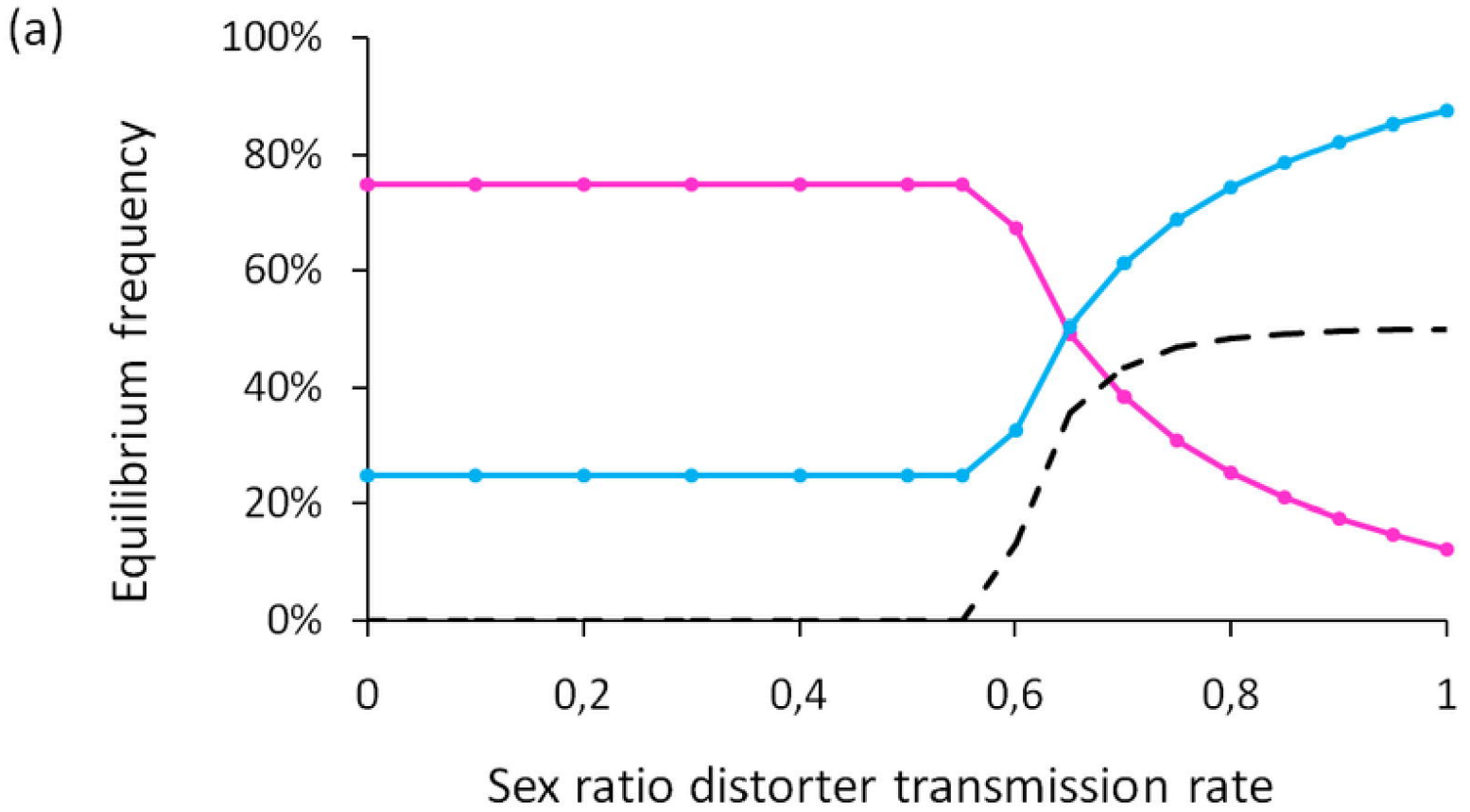
(a)
100%
80%
60%
40%
20%
0%
Equilibrium frequency
0
0,2
0,4
0,6
0,8
1
Sex ratio distorter transmission rate

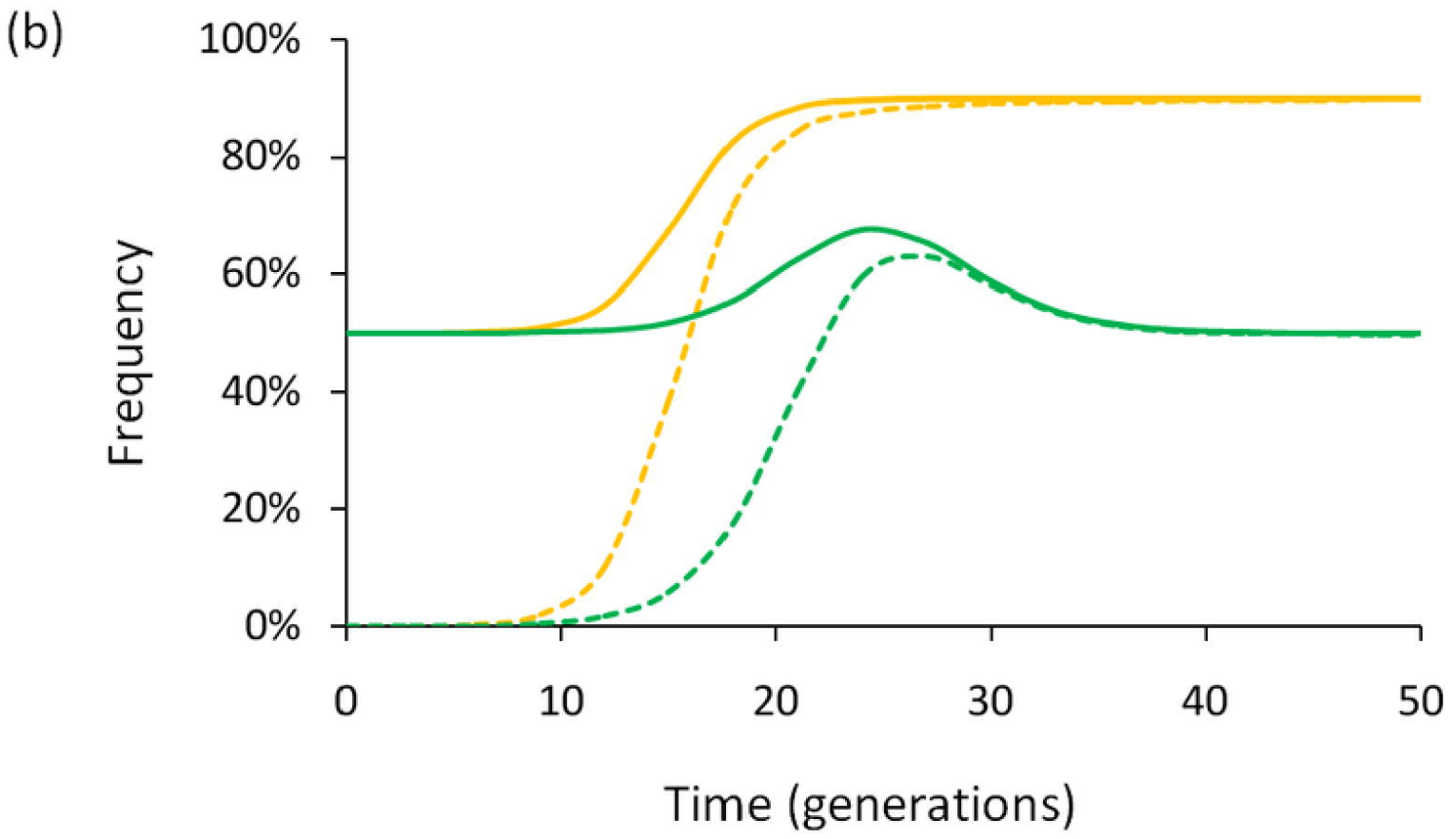
(b)
100%
80%
60%
40%
20%
0%
Frequency
0
10
20
30
40
50
Time (generations)