Competitive Inhibition of Cortisol by Prostaglandins at the Ligand Binding Domain of Glucocorticoid Receptors

Charles D. Schaper, Ph.D.*

November 21, 2019

Abstract

Here, a pathway is shown for the first time indicating competitive inhibition of cortisol by prostaglandins at the critical ligand binding domain of glucocorticoid receptors. This is significant since these materials are widely distributed: glucocorticoid receptors, cortisol and prostaglandins are found in almost every cell and tissue in the human body. In this article, a cooperative relationship is shown between cortisol and prostaglandin results during normative homeostatic conditions, and thus indicates capability of localized control, which is instructive for understanding as well as diagnosis of deviations from optimal physiological function. Moreover, as glucocorticoid receptors are nominally driven through cortisol concentration, the hypothesis developed in this manuscript indicates that the introduction of exogenous sources of prostaglandins, as associated with bacterial infection for example, might trigger dysfunctional responses, including signs and symptoms of disease like fever. The results demonstrating this association of competitive inhibition of cortisol and prostaglandins include comparative molecular modeling analyzing hydrophobic, hydrogen bonding, electrostatic and topology considerations that indicate the similarity in chemical affinity of cortisol and prostaglandin in a preferred configuration at the site of the ligand binding domain of glucocorticoid receptors. The work is useful in understanding normative physiological function as well as for developing treatments during certain diseased states.

*cschaper@transferdevices.com

Graphical Abstract

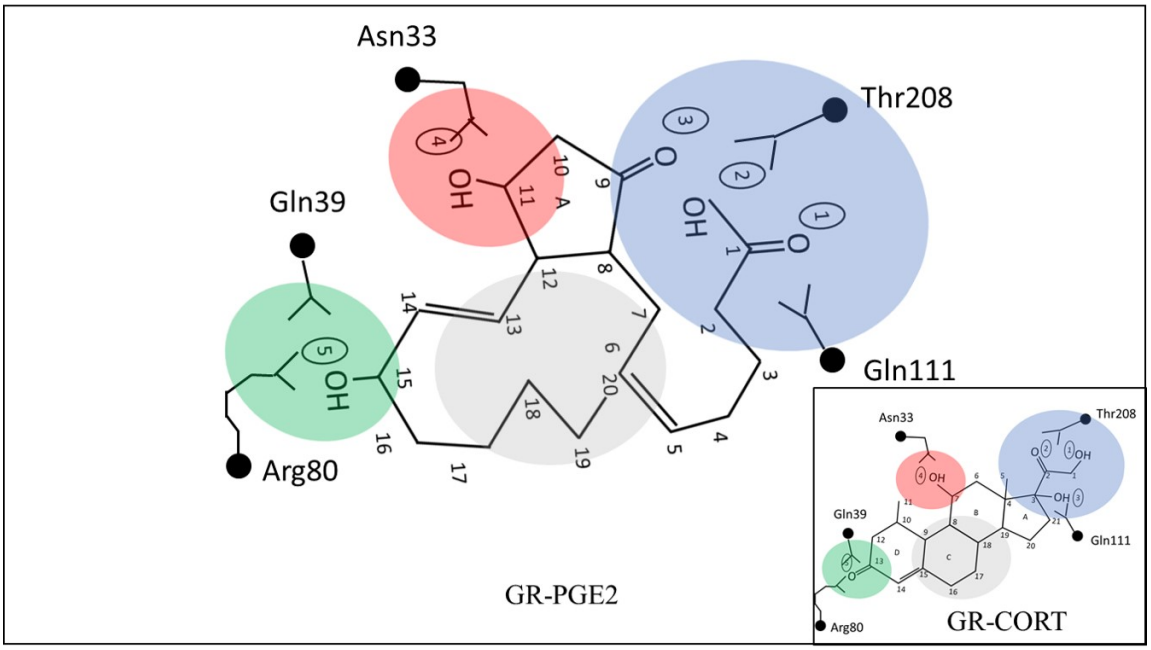

1 Introduction

Because of the wide distribution throughout cells and tissues of the three bioactive materials: cortisol, prostaglandin, and glucocorticoid receptors; the work developed in this paper is important as it demonstrates a likely link and controlling association amongst these group of materials that may be crucial to determining the integrative pathways of physiological function during normative and diseased states. It is shown for the first time that configurations of the prostaglandins have a similar chemical affinity for the ligand binding domain of glucocorticoid receptors, which are prevalent in nearly every human cell. Thus, competitive inhibition is established which can significantly regulate the normative function of cells and tissues, as well as alter its function in states of diseased condition.

As a mechanism with influence over both local and systematic physiological function, including causality of many types of dysfunction and disease, the potential association via competitive inhibition at the glucocorticoid receptor of prostaglandins and cortisol is put forth in further detail. This work supports the recent research of this lab, as described in the preprint [14], indicating for the first time that a configuration of prostaglandin E2 (PGE2) is favorable at the ligand binding domain (LBD) of glucocorticoid receptors (GR) normally occupied by cortisol. It is determined through molecular modeling, comparative analysis, and from mathematical modeling of systemic response, including the effect on producing fever. In this article, a deeper analysis of the structure is related that shows preferred configurations of PGE2 with the LBD of GR, and the association with other prostaglandins besides PGE2 as well as the expressive mechanism during normative conditions.

Cortisol (CORT), a hormone that is the most abundant corticosteroid and is generated in the adrenal gland. It is critical to normative function, and is commonly associated with stress [8]. The HPA axis (hypothalamic-pituitary-axis) which is responsible for generation of cortisol in response of the body to stressful circumstances and other factors emanates from the hypothalamus and has received significant attention in the research literature [16, 6, 7, 3, 20, 9, 11]. The HPA axis involves the hypothalamic release of corticotropin-releasing factor (CRF) that binds to CRF receptors on the anterior pituitary gland, and in turn releases adrenocorticotropic hormone (ACTH). ACTH binds to receptors on the adrenal cortex and stimulates adrenal release of cortisol. To complete the feedback loop, the concentration of cortisol influences the hypothalamic release of CRF as well as the pituitary release of ACTH . The function of such corticosteroid action in the hypothalamus acts as a triggering mechanism [19] and synaptic potentiation have been noted to cortisol [6], which would thus connect cortisol to membrane bound reception. In addition, CORT has a significant influence not only on the hypothalamus but on most bodily functions at the organ level, such as renal function [15] and vasoactive properties.

Cortisol interacts with the glucocorticoid receptor, which is widely distributed through-

out the cells of the body. Dysfunction of cortisol can cause many issues: for example, too low cortisol levels due to misfunctioning adrenal gland can result in a crisis called adrenal insufficiency with symptoms that include fever, chills, fatigue, loss of appetite, stomach pain, body aches [12]. It is noted that these symptoms of adrenal insufficiency are similar to that of an infection, which is even at times misdiagnosed [4] as such. Thus, it indicates a potential relation between cortisol levels and symptoms due to infectious disease. Further, there may even be a connection with Alzheimer disease, in which it has been noted that elevated levels of glucocorticoids and HPA axis dysfunction are consistently observed in patients [2]. Further correlations can be inferred from the undulation of fever characterizing disease such as brucella [5] and the rise and fall of CORT during the day and night [17] as well as respiratory systems during sleep [18, 1].

Prostaglandins (PG) are a family of molecules that has received significant attention, but its association with cortisol has not been examined prior to this study (see a companion article of this lab [14] as well as the results presented herein). Prostaglandins differ from endocrine hormones, such as cortisol, since prostaglandins are produced locally in many places widely distributed throughout the human body, rather than at a single site like cortisol. We show thus that the association with prostaglandins thereby provides a way in which cortisol can exhibit localized control even though it is uniformly distributed throughout the systems. Moreover, prostaglandins, one of which is the most common is denoted as E2 (PGE2), is well known for appearance during infections as it is associated with bacterial and viral agents, and thus this link described in this article can help explain the source of symptoms of disease.

In this research article, the approach taken to show the association of PG with CORT and GR, is to first establish a molecular model comparing CORT and PGE2 in terms of molecular weight, chemical elements, functional groups, electrostatic metrics, hydrophobic interactions, hydrogen bonding capability, and topology. It is a striking result that at the ligand binding domain of the glucocorticoid (GR) receptor there approximately equivalent affinity for the hormone cortisol as it does for prostaglandin E2 in a preferred configuration. Additional analysis is performed by comparing with molecules closely related to CORT and PGE2, including dexamethasone and prednisone, as well as other types of prostaglandins. A simulation study at the cellular level is then analyzed to gauge how the cell may respond to exogenous inputs of CORT during normative circumstances and to exogeneous input of PGE2 during diseased state. A reference is made to experimental analysis of systemic response of external PGE2 input to conclude the study.

2 Results

The association of prostaglandins (PG) at GR is analyzed first through molecular models to evaluate equivalent chemical affinity with cortisol; thus competitive inhibition is established. Additional comparisons are drawn to closely related molecules of CORT and PGE2.

Cellular response is then studied comparing the output signals from exogenous pulses of CORT and PG, and closed-loop analysis is then evaluated for systemic response.

2.1 Affinity at the GR of CORT and PGE2

In Figure 1, the chemical structure of CORT and PGE2 is presented in the standard low-energy configurations. To make our case, the first comparison is molecular weight where CORT and PGE2 are of similar molecular weight, 362.46 g/mol versus 352.46 g/mol respectively, and have nearly the same number of chemical elements 21 versus 20 carbon; 32 versus 30 hydrogen; and importantly the same number of oxygen elements, including carboxylic, hydroxyl, and carbonyl groups. CORT has a five membered ring as does PGE2 which can be formed notably from interaction of AA and COX2.

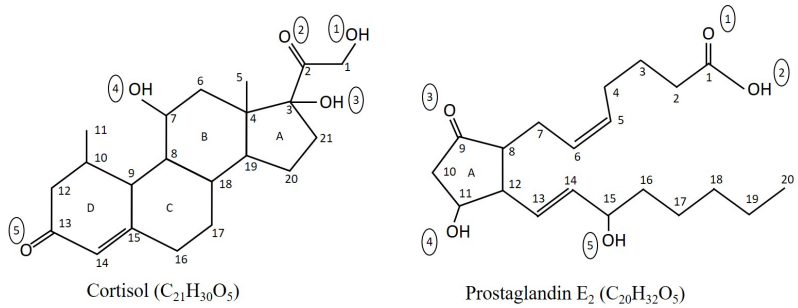

Figure 1: Expressed format of a minimal energy state, a comparison of cortisol and prostaglandin E_2 molecules denote a similarity in the number of chemical elements of carbon, hydrogen, and oxygen, hence molecular weight; the topography of the molecules in terms of relative size is similar. Moreover, the number of oxygen related functional groups is five, and is equivalent between the two molecules with 3 hydroxyl groups and 2 carbonyl groups.

When expressed in standard format outside of solution the structure of PGE2 is dissimilar to the ring structure of CORT; however through a rotation at C4 and C13 of PGE2, a structure resembling a set of rings is formed as indicated in Figure 2. This expression maintains the same double bond arrangement of *cis* configuration on C5-C6 and *trans* configuration on C13-C14. It is also noted that the arrangement critically positions three oxygen groups together such that it is comparable in position to that of CORT. With further rotation of alignment, including out-of-plane alignment, at C6, C13, C18, the four ring structures of CORT can be approximated by PGE2, as within the core charge delocalization will be favorable and lateral stability can be established. We note that in order for this alignment to occur, there needs to be a driving force, and as we will show, the ligand binding domain of the glucocorticoid receptor provides this driving force.

In Figure 3, the functional groups between CORT and PGE2, with rotation, are compared to demonstrate approximate chemical equivalency. In the group of $\mathrm{I}_{\mathrm{CORT}}$ and $\mathrm{I}_{\mathrm{PGE2}}$, three oxygen groups are present, and with $\mathrm{II}_{\mathrm{CORT}}$ and $\mathrm{III}_{\mathrm{CORT}}$, $\mathrm{II}_{\mathrm{PGE2}}$ and $\mathrm{III}_{\mathrm{PGE2}}$, one

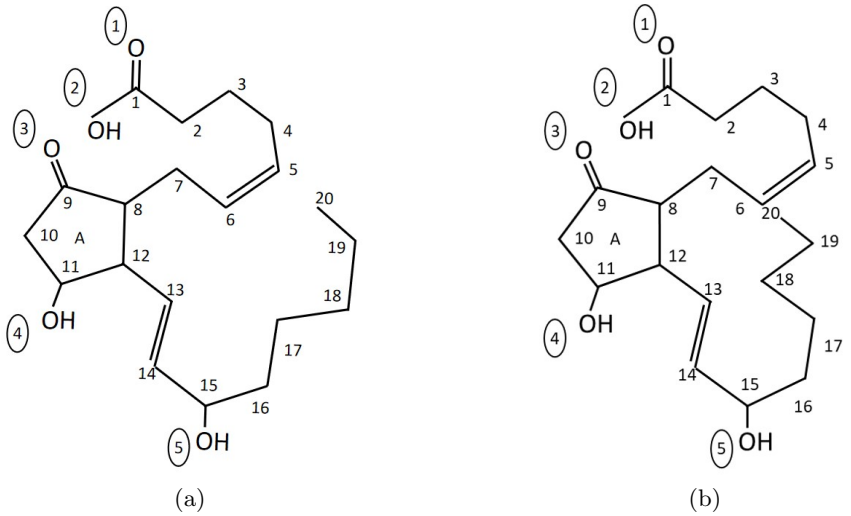

Figure 2: (a) To establish the positioning of PGE2 to better match the activity of cortisol, the structure is proposed where there is a repositioning of PGE2 at C4 and C13. The upper branch, relative to the five membered carbon ring, is positioned such that three oxygen groups are in close proximity and the carbon groups form relative ring structures. The bottom branch is rotated such that a ring formation is roughly formed and the two double bond groups are placed in a linear path, while moving the hydroxyl group along the outer boundary of the structure. Note that the C5-C6 cis and the C13-C14 trans double bond structures are maintained. (b) By further rotation of PGE2 at C17 and out-of-plane alignment and between C20 and C6, ring closure can be approximated with C20 positioning along the double bond for resonance stabilization. Note that a seven ring structure can partially be obtained through C6, C13 and C18, leading to further delocalization of electrostatic charge.

oxygen group each. At the interior of the arrangement, a hydrophobic center exists, with the two double bonds well positioned in PGE2 to duplicate the ring structure of CORT. The greater potential mobility of the carboxylic acid group of I_{PGE2} is available to offset the one carbon offset of the equivalent structure of I_{CORT}. The similarity is also present in the relative positioning of the oxygen-related functional groups of the two molecules.

Based on recent high resolution crystal structures of the interaction of CORT with the ligand binding domain (LBD) of GR [10], the approximate spatial positional relationship of PGE2 with GR, instead of CORT, is presented in Figure 4. It appears to be a nearly identical fit between GR-PGE2 and GR-CORT. It is noted that there is significant hydrogen bonding at the three functional sites, and may even be preferred in comparison to CORT as III_{CORT} requires the presence of water, whereas with III_{PGE2} the hydroxyl group is available to interact directly with Gln39 and Arg80. In I_{PGE2} the single hydroxyl group is available for interaction with Gln111 and Thr208.

Further examination of Figure 4 also indicates the importance of the five-membered

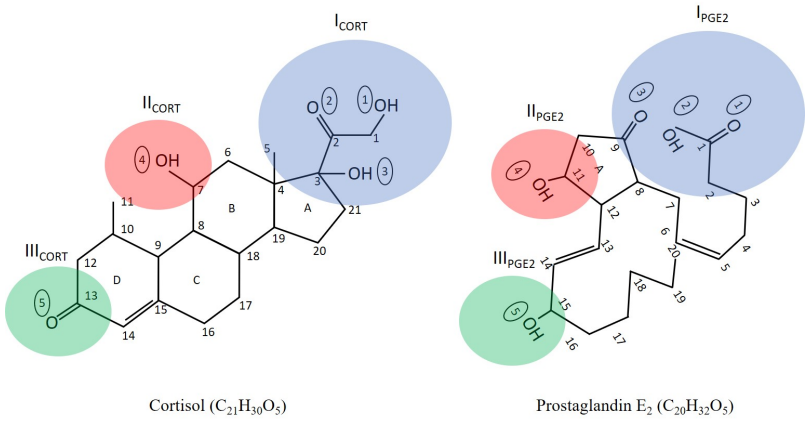

Figure 3: With the reconfiguration of PGE2 and with a rotation of approximately 45 degrees, the cortisol and PGE2 molecules are compared for the functional groups and relative positioning. It is noted that the three sites are correlated with I_{cort} and I_{cort} having three oxygen groups, with one each on the other two groups. The positioning of the functional groups is on the exterior of the PGE2 molecule, equivalent to cortisol, and the interior is composed solely of carbon and hydrogen groups. In addition, the spacing of the groups is approximately consistent, with the width approximately 5 carbon bonds wide for each. The length is about 20% shorter for PGE2 to a first approximation, however the rotation of the branches can extend the length of the molecule, if necessary. The spacing in between functional groups and angular configuration is also approximately the same.

carbon ring formed by COX2, as it positions the two branches of PGE2 to associate with the hydrogen bonding centers of LBD of GR. This establishes the hydrophobic core including the potential multi-ring structure, and the hydrogen bonding surrounding the core. It is noted that the use of aspirin and NSAIDs to block COX2 and thus the suppression of PGE2 would result in improvements of symptoms such as fever.

Moreover, the ring structure of PGE2 sets-up the functional groups on the exterior of the molecular and an internal hydrophobic core, which includes a pair of carbon-carbon double bonds at C5-C6 and C13-C14 interacts with groups of GR including Leu77, Met73, Trp69, Met70, Leu32, Phe92, Cys205, Phe204 (not shown in figure but positioned below the internal core of PGE2). The internal hydrophobic core for each of CORT and PGE2 includes six carbons.

We believe that these modeling results are the first indicating the interaction of PGE2 with GR, occupying the space that CORT would normally occupy. Importantly, it indicates competitive inhibition at the ligand binding allosteric site of GR. It can be inferred that other structures where CORT interacts, such as membrane bound receptors that produce non-genomic responses, that there would be similar competitive inhibitory influence of PGE2 on CORT. Later, we show that this level of competitive inhibition during normative circumstances may actually be beneficial because it imparts localized control of an

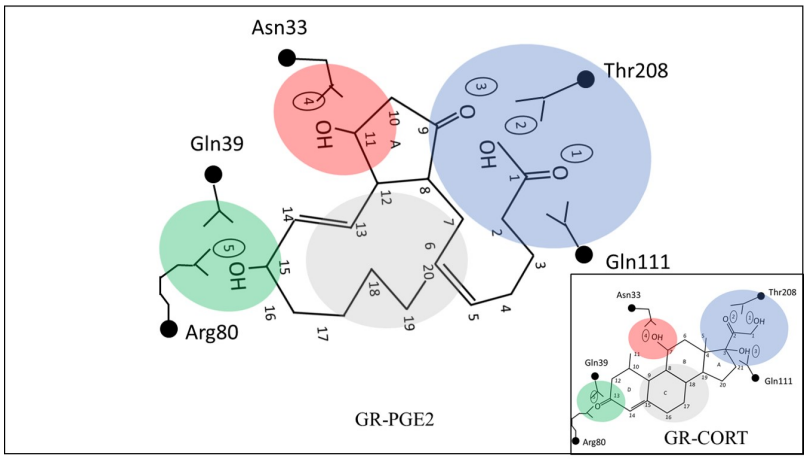

Figure 4: For the ancestral glucocorticoid protein receptor (AncGR2), which is a stable GR useful for crystal studies, at the ligand binding domain (LBD), a fit of PGE2 very similar is noted to that which is achieved with CORT as indicated in the inset. There is substantial equivalent hydrogen bonding at the three functional groups, and at the interior there is substantial hydrophobic interaction and similarity. There may be an improved interaction with PGE2 relative to cortisol with Gln39 and Arg80 (green shaded region) since CORT requires an external water molecule since only a carbonyl group is available, whereas PGE2 already has a hydroxyl group. The three membered oxygen group of PGE2 contains enough free motion as it is unconstrained by rings to achieve optimal alignment (blue shaded region). The double bond alignment of PGE2 at the hydrophobic core is noted. It is also noted that the ring structure of PGE2 formed via the C8-C12 bond is critical to achieve the proper configuration of the two branches and subsequent fit within the hydrophobic core (gray shaded region), which incorporates two carbon-carbon double bonds. Thus the effectiveness of NSAIDs, which disrupts the formation of the C8-C12 bond, is apparent.

endocrine hormone, CORT.

2.2 Comparison with DEX and PRED

To coordinate this new research on linking CORT and PGE2 at GR, we analyze the literature that involved detailed studies with molecules similar to CORT, namely dexamethasone (DEX) and prednisone (PRED) in Figure 5. Thus, an analysis is instructive in terms of chemical affinity of DEX and PRED to relate their structural differences also to that of PGE2 to determine the functional groups where the association with the GR is strongest. From this information, a comparative analysis can be performed to estimate the chemical affinity of PGE2 at GR in comparison to CORT at GR.

For example, DEX and PRED are generally more active over a longer period of time than CORT, and thus it can be inferred which functional group may be critical to the association with GR relative to the other functional groups. Using this comparative anal-

ysis, it can be inferred that the double bond at C10 and C12 is important to improving the hydrogen bonding capability at C13. This would indicate that PGE2 shows a higher affiliation for GR at C15 due to the hydroxyl group instead of the carbonyl corresponding to CORT.

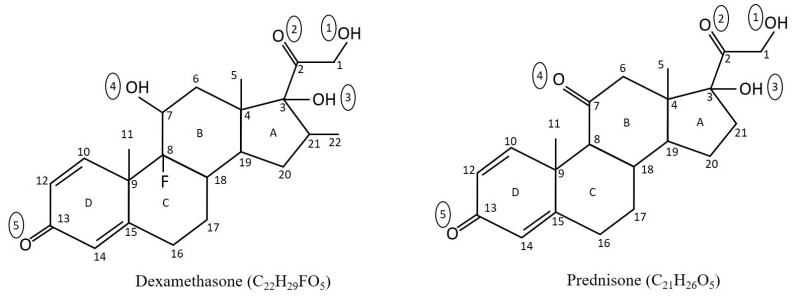

Figure 5: The chemical structure of DEX is similar to that of CORT, however a higher affinity that CORT within the GR is reported in [10]. It can be inferred that the precense of F on C8 and the double bond at C10 and C12 help with hydrogen bonding. PRED is also shown with a difference in lacking an F group and a double bond O at C7, which would decrease hydrogen bonding, and thus the association would seem to be closer to that of CORT.

2.3 Chemical Affinity of Other Prostaglandins at LBD of GR

In the family of prostaglandins, other configurations besides PGE2 show similarity in chemical affinity in comparison to CORT, and thus a capability for intermolecular activity with the LBD of GR and therefore competitive inhibition with CORT. Table 1 lists several other prostaglandins, and indicates the main difference with respect to PGE2, and its possible difference in association with the LBD of GR under study. The result indicates that all prostaglandin have potential for competitive association with CORT, and are capable of altering the expression of CORT if PG was not present.

2.4 Cellular expression

As prostaglandins act locally through distribution via paracrine and autocrine activity, here we put forth the hypothesis that localized neuroendocrine control can result through the competitive inhibitory nature of GR with CORT and the prostaglandins. This would be useful in this situation where a local area must function in a differential manner relative to the overall system, since hormone levels will be effectively activated at the same levels if such localized control were not available. While the local receptor density will provide localized specificity, the degree of modulation can be adapted to reflect status that can be altered dynamically. This is achieved through the localized concentration of prostaglandins. This is analyzed in this section through a modeling study, based upon the relation of the

Molecule	Formula	Difference from PGE2	Difference in Affinity at GR
PGE1	C20H34O5	C5-C6 single bond	$\Downarrow$ hydrophobic core
PGE3	C20H30O5	double bond at C17-C18	$\Downarrow$ C20 positioning
PGD2	C20H32O5	OH at C9; O at C11	$\Uparrow$ $\mathrm{I}_{\mathrm{PGE2}}$ hydrogen bonding $\Downarrow$ $\mathrm{II}_{\mathrm{PGE2}}$ hydrogen bonding
PGFα	C20H34O5	OH at C9	$\Uparrow$ $\mathrm{II}_{\mathrm{PGE2}}$ hydrogen bonding

Table 1: Analysis of the chemical affinity of other prostaglandins relative to PGE2 at GR, which to a first approximation would indicate that PGE1 and PGE3 would be slightly less stable within GR than PGE2, but both would should effective competitive inhibition. PGD2 shows improvments in PGE2 in hydrogen bonding as does PGFα, which may result in slightly different kinetic effects than PGE2.

binding of PGE2 to the ligand binding domain of GR as an inhibitor to the normative binding of CORT can be expressed in a competitive inhibition relation:

$$\mathrm{GP} + \mathrm{C} \underset{\mathrm{k}_{-3}}{\overset{\mathrm{k}_3}{\rightleftharpoons}} \mathrm{G} + \mathrm{C} + \mathrm{P} \underset{\mathrm{k}_{-1}}{\overset{\mathrm{k}_1}{\rightleftharpoons}} \mathrm{GC} + \mathrm{P} \overset{\mathrm{k}_2}{\rightarrow} \mathrm{G} + \mathrm{U} + \mathrm{P}$$

In this relation, it is assumed that PGE2 does not bind to GR while CORT is occupied in the LBD, and vice versa. Thus, in Michaelis-Menten kinetics of steady-state conditions, the concentration of PGE2 and CORT are not changing appreciably and that the product of the interaction U has not significantly increased, thus the reaction velocity V can be computed as:

$$V = \frac{V_{\max}[\mathrm{C}]}{K_m(1 + \frac{[\mathrm{P}]}{K_i}) + [\mathrm{C}]} \tag{1}$$

Thus, as the concentration of CORT is high the velocity of the reaction will run towards $V_{\max}$ and at high concentration of PGE2, the reaction velocity will be minimized. This relation can be embedded within material balances to determine the expression of the resultant output from the cellular environment, U, and this is represented in Figure 6. Here, a linearized representation of the dynamics associated with the interaction of CORT and PGE2 is presented which result in an output of the cellular response, Y to inputs of cortisol hormone circulating C_b, exogenous generated PGE2, also circulating, R_b, and a possible neural transmission signal X. The feedback transfer function $G_I(s)$ denotes the competitive inhibition link to the prostaglandin concentration.

The results of a simulation are presented in Figure 7 in which the inputs for external signals in cortisol and in prostaglandin are pulsed and the internal cellular response

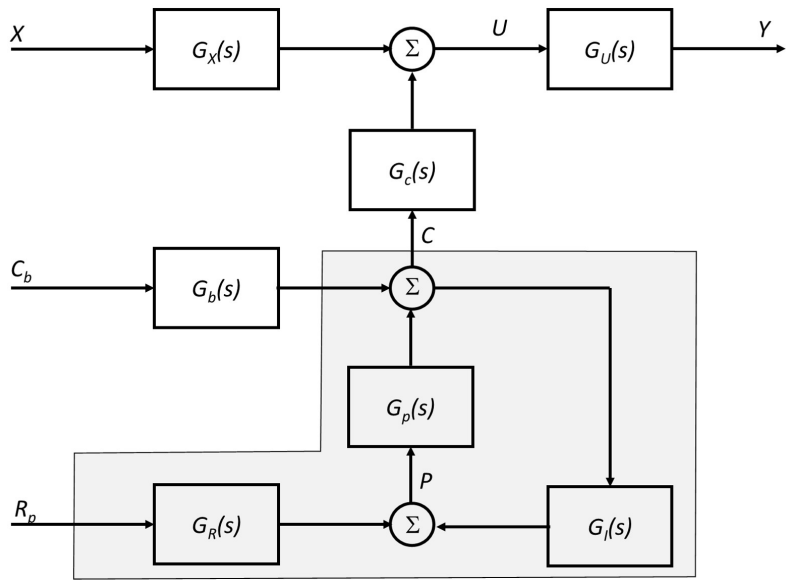

Figure 6: Representation of a linearized system to model the integration of CORT and PGE2 at the GR exhibiting competitive inhibition. The output of the system Y is a function of CORT, C, which is adjusted by PGE2 levels, P. The transfer functions are representative of the time response from inputs to the system of physiological state, X, circulating CORT C_b and local PGE2 input R_p. The feedback loop of CORT to PGE2, as represented through $G_I(s)$ is indicative of the tempered response of CORT due to the presence and generation of PGE2 (shaded region).

undergoing competitive inhibition responds accordingly. For evaluation, the results are normalized and the time constant is maintained for all units as five minutes. As can be noted the impact of a pulse in external cortisol is attenuated due to the linear transfer function and the inhibition of PGE2. It can be seen that as cortisol levels rise, the output signal continues to do so, until prostaglandin increases to a point in which it significantly competes for the ligand binding domain with cortisol. The result on the output Y is increasing but follows the trajectory similar to PGE2 thereby demonstrating localized control.

The simulation of Figure **??** also indicates the response profile when external PGE2 enters the cellular response, as such may be the case due to an external pathogen. It indicates that the cortisol levels will decrease due to the competitive inhibition, and thus the output response will decrease, indicating the inhibitory effect of the prostaglandin. The response profile in comparison to the situation where cortisol enters the cellular response, is considerable different and highlights the effects of disease on the response. On the contrary, for normative situations, prostaglandins can be used to fine tune the response local when cortisol levels are incresed.

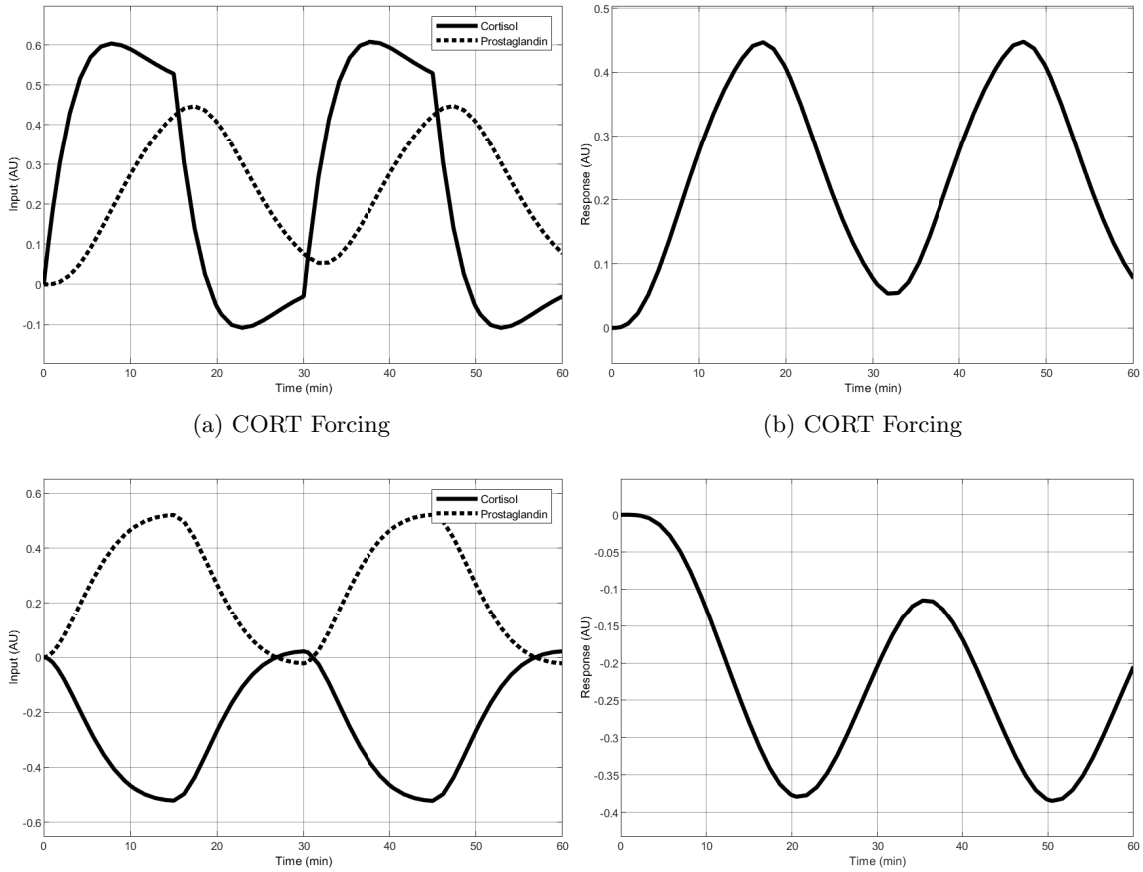

(a) CORT Forcing

(b) CORT Forcing

(c) PG Forcing

(d) PG Forcing

Figure 7: For two pulses of C_b at time of 0 and 30 minutes, the resultant profiles of C and P are presented in (a) and the output of the cellular response Y in (b). It is noted that PGE2 levels rise as CORT enters the system. Initially it is processed rapidly, only tempered by the natural system response, which for all transfer functions is given as a time constant of five mintues. This result is contrasted to that of (c) which corresponds to the same pulse input sequence, expect that the input is R_p, which is external PGE2, where it is noted that the concentration of PGE2 and CORT diverge, while the output response Y decreases, as opposed to that in (b), where it rises. Thus, the response is different dependent upon the nature of the forcing function.

2.5 Systems regulation

In [14, 13], a result indicates that competitive inhibition of cortisol and PGE2, in which PGE2 is externally injected via a pneumococcal vaccination, may present as fever. Thus, PGE2 from external means, which circulates via LPS and is later converted to PGE2

via COX, can interact within the hypothalamus with glucocorticoid receptors and alter the balance between thermoregulatory neurotransmitters and cortisol levels. Thus, the sensory input for cortisol is not in synchronization with the designed response, which results in oscillatory responses. In Figure 8, the exogeneous entrance of PGE2 from LPS, which is derived from bacterial and viral agents, enters the system, and results in dysfunctional responses due to competitive inhibition at the glucocorticoid receptor.

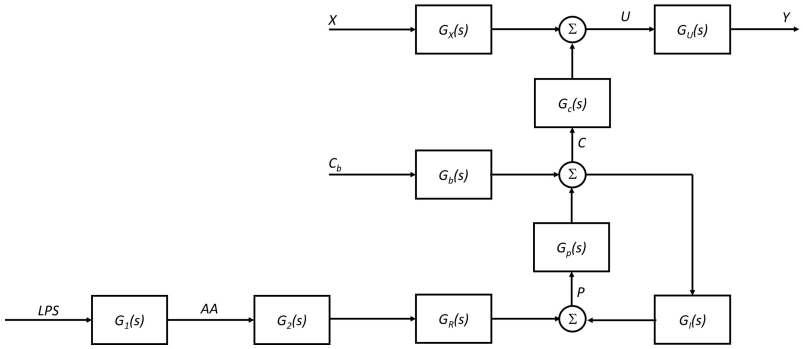

Figure 8: With the introduction of lipopolysaccharide (LPS) from a pathogen, which is converted to Arachidonic Acid (AA) and then to external PGE2, it enters the system and causes problems with the nominal control system resulting in symptomatic responses..

3 Discussion

This research has provided evidence to support the indication, presented here for this first time, that at GR there is competitive inhibition between CORT and the prostaglandins. We believe that this relationship is important not only during normative physiological homeostasis in maintaining optimal localized control, but also the source of significant instances of dysfunction during diseased states. This result is important because of the wide significance and distribution of the bioactive materials: specifically, the glucocorticoid receptor is distributed throughout nearly every cell in the body, and cortisol interacts with GR and is the most common corticosteroid, and prostaglandins are found in nearly every tissue and are a major component of the inflammatory response. Certainly a potential connection between GR, CORT, and PG is critical to the understanding of human physiology.

In this article, a significant relation is shown between configurations of molecular positioning of prostaglandins within the ligand binding domain of glucocorticoid receptors that is normally occupied by cortisol. The agreement is across multiple areas of comparison including molecular weight, functional groups, hydrogen bonding, hydrophobic positioning, and topology including overall dimensional and ring arrangement. The proposed PGE2 configuration at GR appears stable and comparable to CORT and its analogues including

DEX and PRED. Other structures of PG including PGE1, PGE3, PGD2, and PGFα also show compatibility.

Thus, the situation of competitive inhibition is established, and the rates of hormone usage of CORT will be altered by the presence of prostaglandin. It appears during normative operation that prostaglandins and cortisol may work in a symbiotic relation, as the cellular output from CORT levels is tempered by the availability of PG and its inhibition factor. The resultant output is consistent with the response intended by CORT, and is in synchronization with PG, which could thereby provide localized control of the tissue segment influenced by PG.

However, when external injections of prostaglandins occur, for example from a diseased state which would circulate higher levels of PGE2, then PG acts in opposition to CORT. Examples are provided at both the cellular level and at the systems level. The interference of PG on CORT may result in symptoms of disease, such as fever.

While this research has focused on the ligand binding domain of the glucocorticoid receptor, other receptors where cortisol acts could also be influenced by prostaglandins, which due to its autocrine and paracrine activity, occupy both the intracellular and extracellular medium. We believe that this is the case, which would potential influence neurotransmission function. Cortisol may act upon membrane bound receptors altering ion channel flow, thereby depolarizing the cell, and thus decreasing the threshold for action potential and increasing its sensitivity. Further usage of the molecular and mathematical models will be used to evaluate diseased conditions and to propose treatment options through chemical affinity and dose simulation and optimization analysis.

4 Methods

The methods used in this analysis were as follows:

- Molecular Modeling: The ligand binding domain (LBD) of the glucocorticoid receptor for cortisol was identified in [10] from crystal studies, which also indicated the relative positioning of dexamethasone within the LBD. Using these arrangements as a basis for the positioning of the binding structures of the LBD, we analyzed PGE2 and separated the periphery of the stucture into three areas of functional groups, and the core hydrophobic structure. We then organized the PGE2 molecule to match CORT as closely as possible in terms of hydrogen bonding, core ring structures and hydrophobic nature, electrostatic interaction, intramolecular interactions, and topography, while retaining the EZ structure of its double bonds to achieve the following approximate comparative structure of Table 2.

- Simulation: The simulation analyzing the performance of exogeneous inputs of cortisol and prostaglandins was computed using Matlab Simulink.

Item	Cortisol	Prostaglandin E2
Molecular Weight	362.46 g/mol	352.46 f/mol
C elements	21	20
H elements	32	30
O elements	5	5
core	hydrophobic	hydrophobic
core C	6	6
periphery binding	hydrogen bonding	hydrogen bonding
periphery groups	three O/OH	three O/OH
O at (I/II/III) groups	3/1/1	3/1/1
III functional group	O + H_2O	OH
Approx. Size C-C	8 x 5	8 x 5
Ring Groups	4	4 with resonance

Table 2: Comparison of the chemical affinity of Cortisol and Prostaglandin E2 in a preferred configuration at the ligand binding domain of the glucocorticoid receptor.

Bibliography

[1] Eduardo E Benarroch. Control of the cardiovascular and respiratory systems during sleep. *Autonomic Neuroscience*, 2019.

[2] Geoffrey Canet, Nathalie Chevallier, Véronique Perrier, Catherine Desrumaux, and Laurent Givalois. Targeting glucocorticoid receptors: A new avenue for alzheimer's disease therapy. In *Pathology, Prevention and Therapeutics of Neurodegenerative Disease*, pages 173–183. Springer, 2019.

[3] Véronne AJ de Vrind, Annemieke Rozeboom, Inge G Wolterink-Donselaar, Mieneke CM Luijendijk-Berg, and Roger AH Adan. Effects of gaba and leptin receptor-expressing neurons in the lateral hypothalamus on feeding, locomotion, and thermogenesis. *Obesity*, 2019.

[4] Rosemary Dineen, Christopher J Thompson, and Mark Sherlock. Adrenal crisis: prevention and management in adult patients. *Therapeutic advances in endocrinology and metabolism*, 10:2042018819848218, 2019.

[5] Christelle G Ephrem, Madonna J Matar, Gaelle C Chalhoub, and Wafaa G Greige. Brucella endocarditis: diagnostic challenges. *Journal of Infection in Developing Countries*, 12, 2018.

[6] Laurent Groc, Daniel Choquet, and Francis Chaouloff. The stress hormone corticosterone conditions ampar surface trafficking and synaptic potentiation. *Nature neuroscience*, 11(8):868, 2008.

[7] Femke L Groeneweg, Henk Karst, E Ron de Kloet, and Marian Joëls. Mineralocorticoid and glucocorticoid receptors at the neuronal membrane, regulators of nongenomic corticosteroid signalling. *Molecular and cellular endocrinology*, 350(2):299–309, 2012.

[8] John E Hall. *Guyton and Hall textbook of medical physiology*. Elsevier Health Sciences, 2015.

[9] C Klein, W Jonas, P Wiedmer, S Schreyer, L Akyüz, J Spranger, R Hellweg, and B Steiner. High-fat diet and physical exercise differentially modulate adult neurogenesis in the mouse hypothalamus. *Neuroscience*, 400:146–156, 2019.

[10] Xu Liu, Yashuo Wang, and Eric A Ortlund. First high-resolution crystal structures of the glucocorticoid receptor ligand-binding domain–peroxisome proliferator-activated γ coactivator 1-α complex with endogenous and synthetic glucocorticoids. *Molecular Pharmacology*, 96(4):408–417, 2019.

[11] Stephanie L Padilla, Jazmine G Perez, Miriam Ben-Hamo, Christopher W Johnson, Raymond EA Sanchez, Ivana L Bussi, Richard D Palmiter, and O Horacio. Kisspeptin neurons in the arcuate nucleus of the hypothalamus orchestrate circadian rhythms and metabolism. *Current Biology*, 29(4):592–604, 2019.

[12] R Louise Rushworth, David J Torpy, and Henrik Falhammar. Adrenal crisis. *New England Journal of Medicine*, 381(9):852–861, 2019.

[13] Charles Schaper. Dynamics and internal control of body temperature in response to infectious agents and other causal factors, 2019. *BioRxiv*: https://doi.org/10.1101/566679.

[14] Charles Schaper. Identifying integrative molecular pathways for predictive modeling of infectious disease, 2019. *BioRxiv*: https://doi.org/10.1101/835546.

[15] Nobuaki Shimizu, Masaru Hasumi, Tatsuya Hamano, Misa Iijima, Takako Yoshioka, Yuto Yamazaki, and Hironobu Sasano. Renal primitive neuroectodermal tumor with elevated plasma adrenocorticotropic hormone levels: A case report. *IJU Case Reports*, 2(3):128–131, 2019.

[16] Marni N Silverman, Brad D Pearce, Christine A Biron, and Andrew H Miller. Immune modulation of the hypothalamic-pituitary-adrenal (hpa) axis during viral infection. *Viral immunology*, 18(1):41–78, 2005.

[17] Sterre SH Simons, Roseriet Beijers, Antonius HN Cillessen, and Carolina de Weerth. Development of the cortisol circadian rhythm in the light of stress early in life. *Psychoneuroendocrinology*, 62:292–300, 2015.

[18] William D Todd, Henning Fenselau, Joshua L Wang, Rong Zhang, Natalia L Machado, Anne Venner, Rebecca Y Broadhurst, Satvinder Kaur, Timothy Lynagh, David P Olson, et al. A hypothalamic circuit for the circadian control of aggression. *Nature neuroscience*, 21(5):717, 2018.

[19] Eva MG Viho, Jacobus C Buurstede, Ahmed Mahfouz, Lisa L Koorneef, Lisa TCM van Weert, René Houtman, Hazel J Hunt, Jan Kroon, and Onno C Meijer. Corticosteroid action in the brain: the potential of selective receptor modulation. *Neuroendocrinology*, 2019.

[20] David J Walker and Karen A Spencer. Glucocorticoid programming of neuroimmune function. *General and comparative endocrinology*, 256:80–88, 2018.