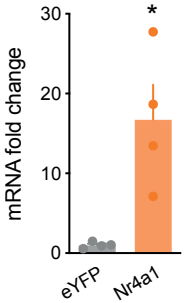
a
mRNA fold change
30
20
10
0
*
eYFP
Nr4a1

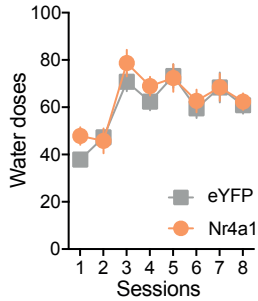
b
Water doses
100
80
60
40
20
0
1 2 3 4 5 6 7 8
Sessions
eYFP
Nr4a1

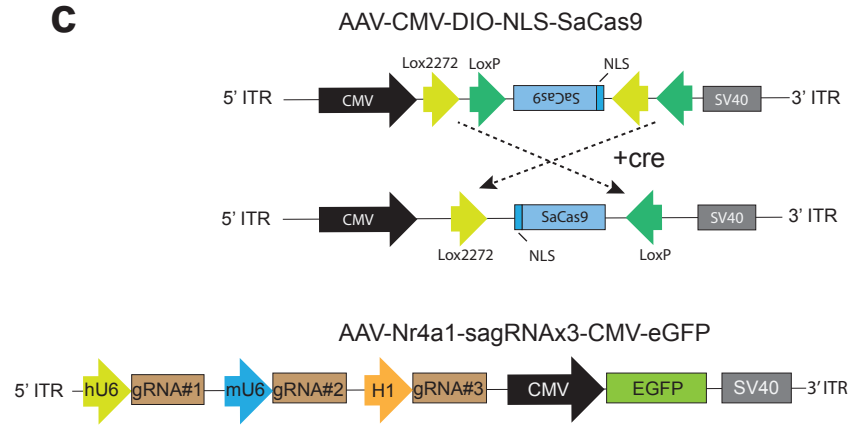
c
AAV-CMV-DIO-NLS-SaCas9
5' ITR
CMV
Lox2272
LoxP
SaCas9
NLS
SV40
3' ITR
+cre
5' ITR
CMV
SaCas9
SV40
3' ITR
Lox2272
NLS
LoxP
AAV-Nr4a1-sagRNAx3-CMV-eGFP
5' ITR
hU6
gRNA#1
mU6
gRNA#2
H1
gRNA#3
CMV
EGFP
SV40
3' ITR

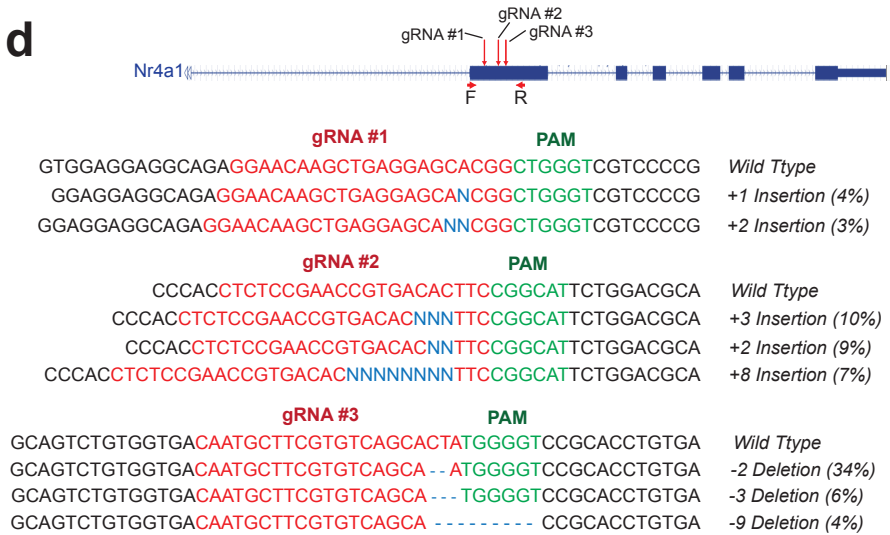
d
gRNA #1
gRNA #2
gRNA #3
Nr4a1
F
R
gRNA #1
PAM
GTGGAGGAGGCAGAGGAACAAGCTGAGGAGCACGGCTGGGTCGTCCCCG Wild Ttype
GGAGGAGGCAGAGGAACAAGCTGAGGAGCANCGGCTGGGTCGTCCCCG +1 Insertion (4%)
GGAGGAGGCAGAGGAACAAGCTGAGGAGCANNCGGCTGGGTCGTCCCCG +2 Insertion (3%)
gRNA #2
PAM
CCCACCTCTCCGAACCGTGACACTTCCGGCATTCTGGACGCA Wild Ttype
CCCACCTCTCCGAACCGTGACACNNNTTCCGGCATTCTGGACGCA +3 Insertion (10%)
CCCACCTCTCCGAACCGTGACACNNTTCCGGCATTCTGGACGCA +2 Insertion (9%)
CCCACCTCTCCGAACCGTGACACNNNNNNNNTTCCGGCATTCTGGACGCA +8 Insertion (7%)
gRNA #3
PAM
GCAGTCTGTGGTGACAATGCTTCGTGTCAGCACTATGGGGTCCGCACCTGTGA Wild Ttype
GCAGTCTGTGGTGACAATGCTTCGTGTCAGCA--ATGGGGTCCGCACCTGTGA -2 Deletion (34%)
GCAGTCTGTGGTGACAATGCTTCGTGTCAGCA---TGGGGTCCGCACCTGTGA -3 Deletion (6%)
GCAGTCTGTGGTGACAATGCTTCGTGTCAGCA---------CCGCACCTGTGA -9 Deletion (4%)

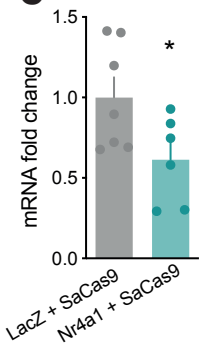
e
mRNA fold change
1.5
1.0
0.5
0.0
*
LacZ + SaCas9
Nr4a1 + SaCas9

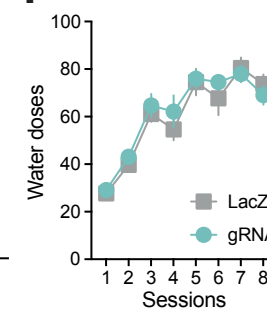
f
Water doses
100
80
60
40
20
0
1 2 3 4 5 6 7 8
Sessions
LacZ
gRNA