Supplementary Technical Cross 1: Activation Domain Screen

A

X^{w1118};UAS::dCas9-VPR[W+];*GMR*-GAL4[W+]
X^{w1118};UAS::dCas9-VPR[W+];*GMR*-GAL4[W+]

X

Sample

Xv^1y^1;-;eve-sgRNA[V+]
Y ;-;*eve*-sgRNA[V+]

→ Xv^1y^1/Y;UAS::dCas9-VPR[W+];*GMR*-GAL4[W+]
X^{w1118} ; - ;*eve*-sgRNA[V+]

Collect Tissue (30 heads)
RNA extraction
cDNA Synthesis
qRT-PCR

Control

X^{w1118};-;-
Y ;-;-

→ X^{w1118}/Y;UAS::dCas9-VPR[W+];GMR-GAL4[W+]
X^{w1118} ; - ; -

Collect Tissue (30 heads)
RNA extraction
cDNA Synthesis
qRT-PCR

B

X^{w1118};UAS::dCas9-P300 Core[W+];*GMR*-GAL4[W+]
X^{w1118};UAS::dCas9-P300 Core[W+];*GMR*-GAL4[W+]

X

Sample

Xv^1y^1;-;eve-sgRNA[V+]
Y ;-;*eve*-sgRNA[V+]

→ Xv^1y^1/Y;UAS::dCas9-p300 Core[W+];*GMR*-GAL4[W+]
X^{w1118} ; - ;*eve*-sgRNA[V+]

Collect Tissue (30 heads)
RNA extraction
cDNA Synthesis
qRT-PCR

Control

X^{w1118};-;-
Y ;-;-

→ X^{w1118}/Y;UAS::dCas9-P300 Core[W+];GMR-GAL4[W+]
X^{w1118} ; - ; -

Collect Tissue (30 heads)
RNA extraction
cDNA Synthesis
qRT-PCR

C

X^{w1118};UAS::dCas9-Nejire Core[W+];*GMR*-GAL4[W+]
X^{w1118};UAS::dCas9-Nejire Core[W+];*GMR*-GAL4[W+]

X

Sample

Xv^1y^1;-;eve-sgRNA[V+]
Y ;-;*eve*-sgRNA[V+]

→ Xv^1y^1/Y;UAS::dCas9-Nejire Core[W+];*GMR*-GAL4[W+]
X^{w1118} ; - ;*eve*-sgRNA[V+]

Collect Tissue (30 heads)
RNA extraction
cDNA Synthesis
qRT-PCR

Control

X^{w1118};-;-
Y ;-;-

→ X^{w1118}/Y;UAS::dCas9-Nejire Core[W+];GMR-GAL4[W+]
X^{w1118} ; - ; -

Collect Tissue (30 heads)
RNA extraction
cDNA Synthesis
qRT-PCR

Supplementary Technical Cross 2: qRT-PCR sgRNA screen in eyes

A

X^{w1118};UAS::dCas9-VPR[W+];*GMR*-GAL4[W+]
X^{w1118};UAS::dCas9-VPR[W+];*GMR*-GAL4[W+]

X

Samples

Xv^1y^1;-;sgRNA[V+]
Y ;-;sgRNA[V+]

→ Xv^1y^1/Y;UAS::dCas9-VPR;*GMR*-GAL4
X^{w1118} ; - ;sgRNA[V+]

Collect Tissue (30 heads)
RNA extraction
cDNA Synthesis
qRT-PCR

Control

X^{w1118};-;-
Y ;-;-

→ X^{w1118}/Y;UAS::dCas9-VPR;GMR-GAL4
X^{w1118} ; - ; -

Collect Tissue (30 heads)
RNA extraction
cDNA Synthesis
qRT-PCR

Supplementary Technical Cross 3: CRISPRa Lethality Screen

A

X^{w1118};UAS::dCas9-VPR[W+];*aTubulin-84b*-GAL4[W+]
X^{w1118}; SM5=TM6b

X

Screen

Xv^1y^1;-;sgRNA[V+]
Y ;-;sgRNA[V+]

→ Xv^1y^1/Y;UAS::dCas9-VPR[W+];*aTubulin-84b*-GAL4[W+] *
X^{w1118} ; - ;sgRNA[V+]

X^{w1118} ; SM5=TM6b
Xv^1y^1 /Y ; - ; -

%survival=((*Non-Balanced)/(Total Flies))x100)x2

Control

X^{w1118};-;-
Y ;-;-

→ X^{w1118} ;UAS::dCas9-VPR[W+];*aTubulin-84b*-GAL4[W+] *
X^{w1118}/Y; - ; -

X^{w1118} ; SM5=TM6b
X^{w1118}/Y; - ; -

%survival=((*Non-Balanced)/(Total Flies))x100)x2

B

X^{w1118};UAS::dCas9-VPR[W+];*driver*-GAL4[W+]
X^{w1118}; Cyo ; TM6b

X

Screen

Xv^1y^1;-;sgRNA[V+]
Y ;-;sgRNA[V+]

→ Xv^1y^1/Y;UAS::dCas9-VPR[W+];*driver*-GAL4[W+] *
X^{w1118} ; - ;sgRNA[V+]

Xv^1y^1/Y;UAS::dCas9-VPR[W+];TM6b
X^{w1118} ; - ;sgRNA[V+]

Xv^1y^1/Y; CyO ;*driver*-GAL4[W+]
X^{w1118} ; - ;sgRNA[V+]

Xv^1y^1/Y; CyO ;TM6b
X^{w1118} ; - ;sgRNA[V+]

%survival=((*Non-Balanced)/(Total Flies))x100)x4

C

X^{w1118};UAS::dCas9-VPR[W+];*driver*-GAL4[W+]
X^{w1118};UAS::dCas9-VPR[W+]; TM6b

X

Screen

Xv^1y^1;-;sgRNA[V+]
Y ;-;sgRNA[V+]

→ Xv^1y^1/Y;UAS::dCas9-VPR[W+];*driver*-GAL4[W+] *
X^{w1118} ; - ;sgRNA[V+]

Xv^1y^1/Y;UAS::dCas9-VPR[W+];TM6b
X^{w1118} ; - ;sgRNA[V+]

%survival=((*Non-Balanced)/(Total Flies))x100)x2

D

X^{w1118};UAS::dCas9-VPR[W+];*driver*-GAL4[W+]
X^{w1118}; CyO ;*driver*-GAL4[W+]

X

Screen

Xv^1y^1;-;sgRNA[V+]
Y ;-;sgRNA[V+]

→ Xv^1y^1/Y;UAS::dCas9-VPR[W+];*driver*-GAL4[W+] *
X^{w1118} ; - ;sgRNA[V+]

Xv^1y^1/Y; CyO ;*driver*-GAL4[W+]
X^{w1118} ; - ;sgRNA[V+]

%survival=((*Non-Balanced)/(Total Flies))x100)x2

E

X^{w1118};UAS::dCas9-VPR[W+];*driver*-GAL4[W+]
X^{w1118};UAS::dCas9-VPR[W+];*driver*-GAL4[W+]

X

Screen

Xv^1y^1;-;sgRNA[V+]
Y ;-;sgRNA[V+]

→ Xv^1y^1/Y;UAS::dCas9-VPR[W+];*driver*-GAL4[W+]
X^{w1118} ;UAS::dCas9-VPR[W+] ;sgRNA[V+]

%survival=Viable or Lethal

Non-standard Nomenclature:
A/B = either A or B, not both genotypes
→ Next generation
⇢ Taken Forward/Crossed to
⋊ Recombination Event
?Δ Putative INDEL mutation
Δ Confirmed INDEL mutation
?{P}? P Element Insertion with unknown insertion point

Supplementary Technical Cross 4: CRISPR/Cas9 INDEL Creation

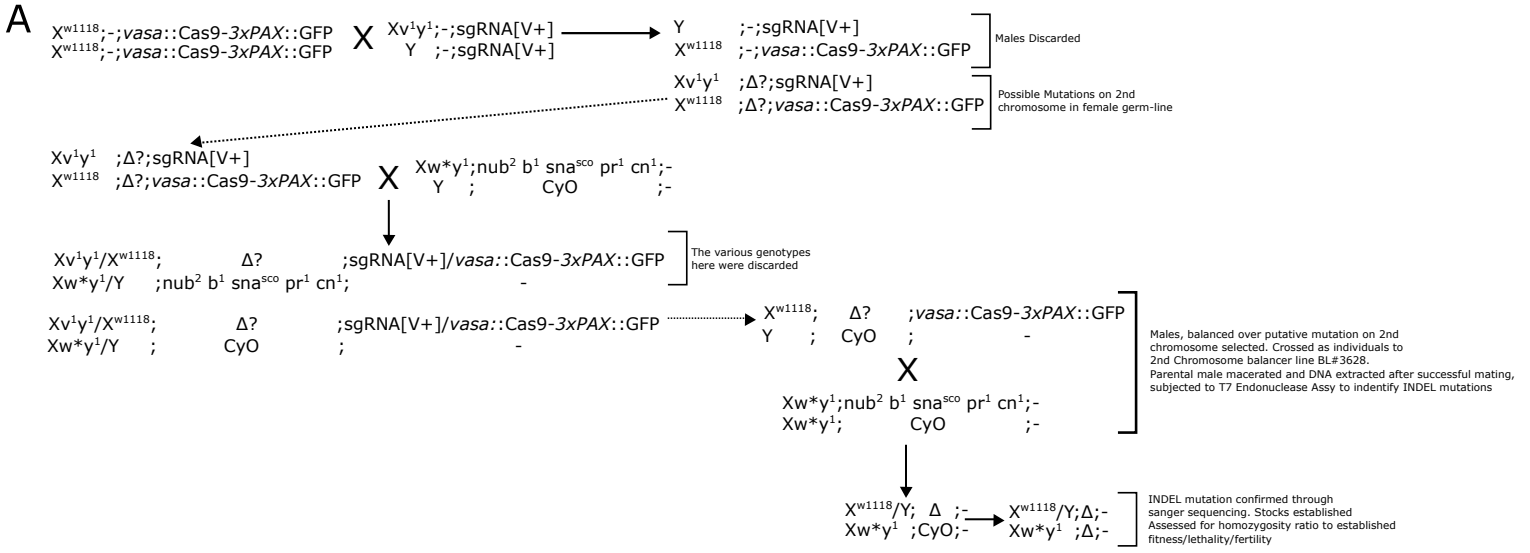

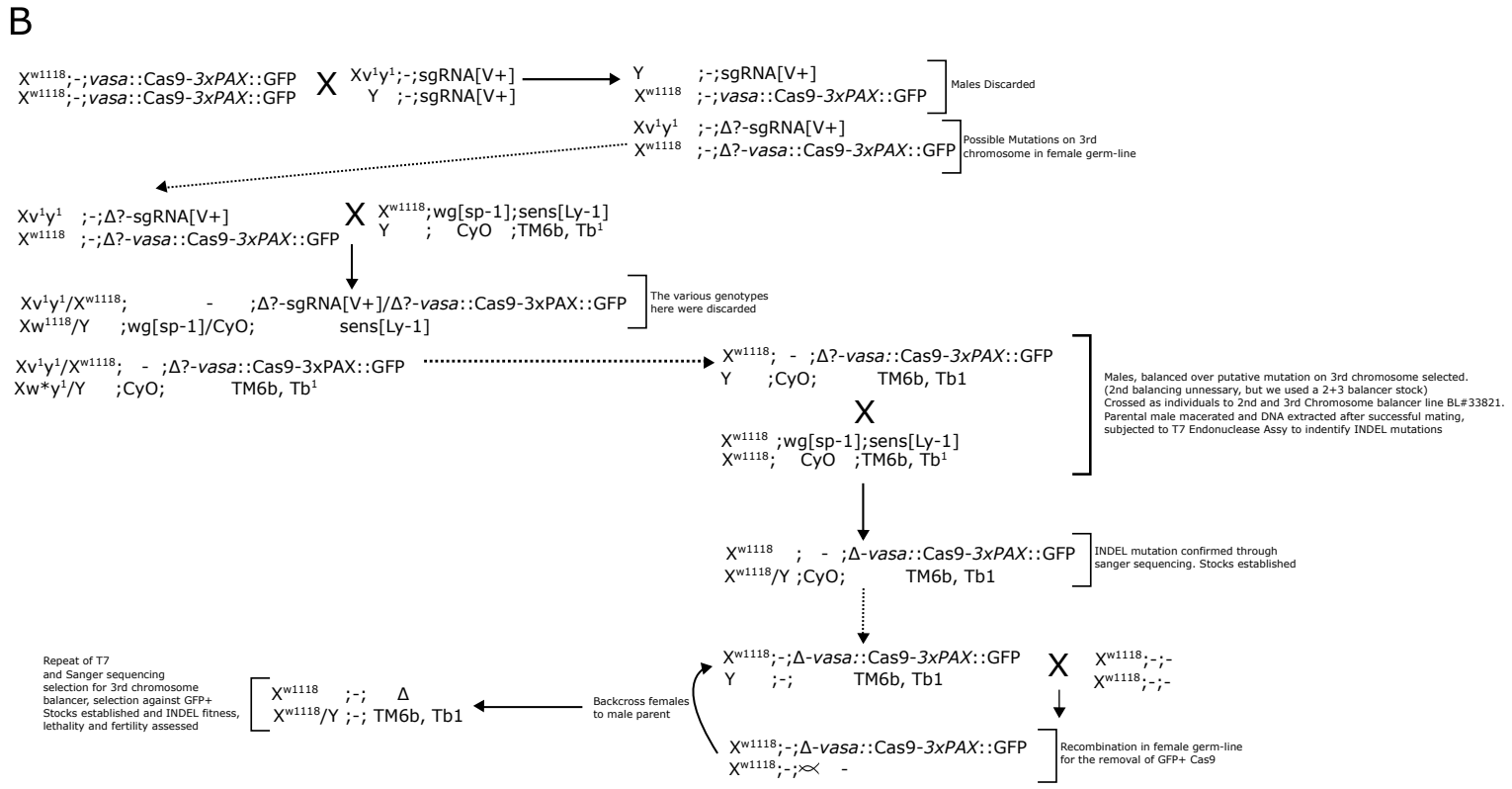

Supplementary Technical Cross 5: qRT-PCR and Protein Analysis in the embryo

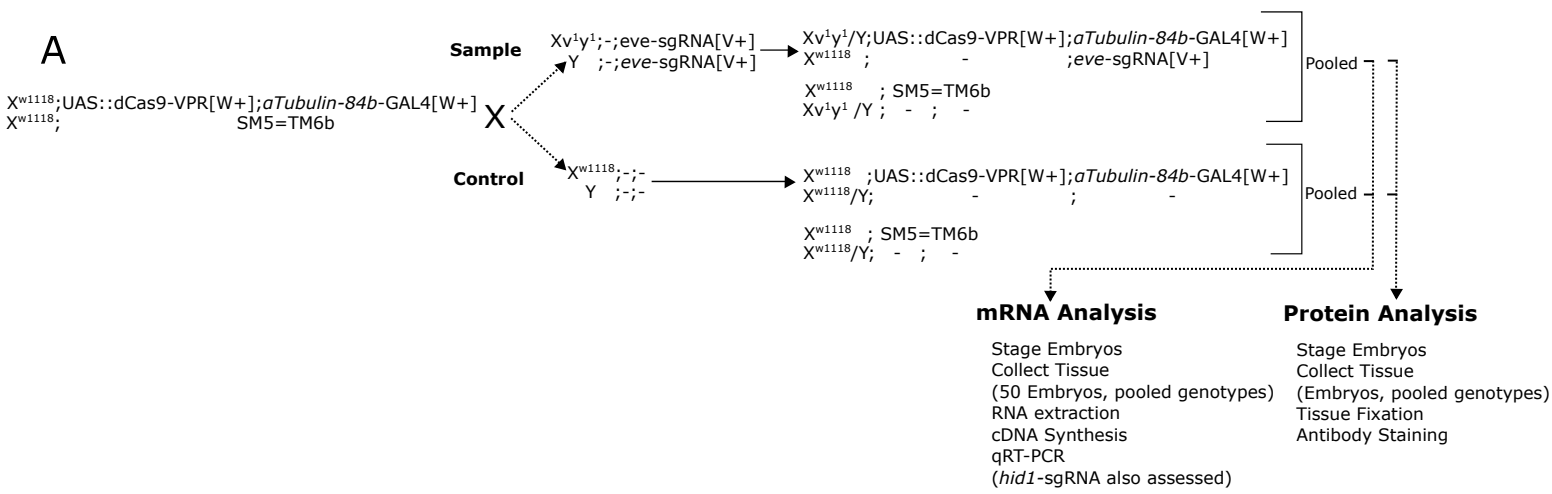

Supplementary Technical Cross 6: Synthetic Lethal Element Screen

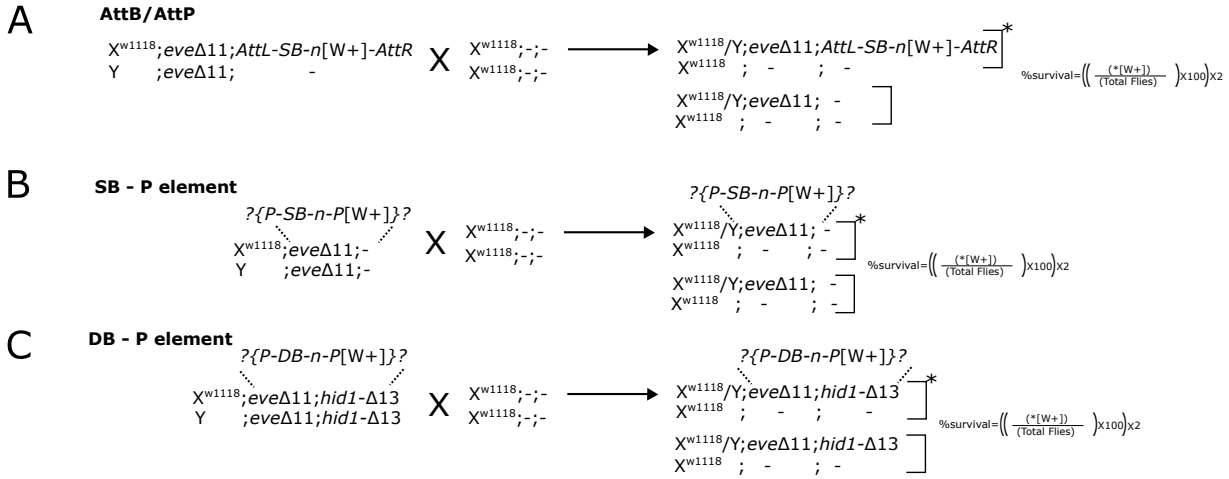

Supplementary Technical Cross 1: Activation Domain Screen. Cross of dCas9-Activators expressed in eyes from *GMR*-GAL4 driver in the eyes to *eve*-sgRNA to assess strength of Activation fusions. Control is white^{1118} flies which contain no sgRNA. (**A**)dCas9-VPR. (**B**) dCas9-p300. (**C**) dCas9-Nejire.

Supplementary Technical Cross 2: qRT-PCR sgRNA screen in eyes (A) Cross of dCas9-VPR to sgRNA lines to assess strength of sgRNA induced activation in eyes. In total 13 sgRNAs were crossed to female dCas9-VPR lines and each assessed for activation potential using gene specific primers on cDNA made from head RNA.

Supplementary Technical Cross 3: CRISPRa Lethality Screen: Female activator-GAL4 lines crossed to male sgRNAs. Genotypes scored in F1 differ depending on the balancer genotype of the female line crossed (See Supplementary Data Table 1 for which crosses used which strategy) **(A)** Tubulin-GAL4 driving UAS::dCas9-VPR is balanced over a multiple 2nd and 3rd fused balancer; progeny can inherit either UAS::dCas9-VPR and *αTubulin-84b*-GAL4 or the balancer. sgRNA lines were crossed as males and scored for presence of absence of balancer phenotypes. % Survival was calculated as shown. (**B**) When both UAS::dCas9-VPR and driver-GAL4 are balanced, 4 possible phenotypes are scored in the F1. (**C**) UAS::dCas9-VPR is homozygous and *driver*-GAL4 is balanced in female parent (**D**) UAS::dCas9-VPR is heterozygous and *driver*-GAL4 is homozygous in female parent. (**E**) Both UAS::dCas9-VPR and *driver*-GAL4 are homozygous, phenotypes not scored in F1, presence of absence of progeny used to discern lethality.

Supplementary Technical Cross 4: CRISPR/Cas9 INDEL Creation. Female *vasa:*Cas9 line crossed to male sgRNAs (A) Strategy to induce INDEL mutations on the 2nd chromosome using a 2nd Chromosome balancer to maintain the putative INDEL through successive generations. **(B)** A more complex strategy is required for establishing chromosome 3 INDEL mutations as both the sgRNA and Cas9 are integrated at the AttP-9A (VK00027) on chromosome 3 which needed to be removed to accurately assess the viability of the mutation. The putative INDEL induced in female germ-cells is selected with GFP in order to easily screen for GFP absence in later generations(sgRNA is marked by Vermillion complementation, which is not possible to score in a W+ background); a balancer that maintains the mutation on chromosome 3 used. GFP is lost through recombination in the female germ-line in the absence of a balancer in the final step. INDELs were then reconfirmed to be present and maintained with a 3rd chromosome balancer.

Supplementary Technical Cross 5: qRT-PCR and Protein Analysis in the embryo (A) *αTubulin-84b*-GAL4 is used to drive UAS::dCas9-VPR and crossed to *eve*-sgRNA (also *hid1*-sgRNA for mRNA analysis) males. Because the *αTubulin-84b*-GAL4 is not viable as a homozygous insertion it was not possible to obtain non-segregating lines. F1 progeny are a mix of two genotypes, one that can putatively activate expression at the *eve* (or *hid*) locus and a balancer genotype. As embryos were assessed it was not possible to distinguish F1 genotypes (dominant marker of the balancer becomes visible at the larval stage onwards). We therefore pooled F1 progeny and compared against the control line which contains no sgRNA in order to discern over-expression phenotypes.

Supplementary Technical Cross 6: Synthetic Lethal Element Screen. Testing for lethality involved crossed heterozygous male transgenic lines to white^{1118} female flies which are wild-type for sgRNA binding sites at the *eve* and *hid* loci. **(A)** Transgenics derived from PhiC31 integration using the AttB/AttP sites **(B)** Single Barrier vector integrated using P elements at various (unknown) chromosomal locations. **(C)** Double Barrier vectors integrated at various locations with P elements, integrated into a genome protective at the *eve* and *hid* loci.